FORMULA MX
Pro stock

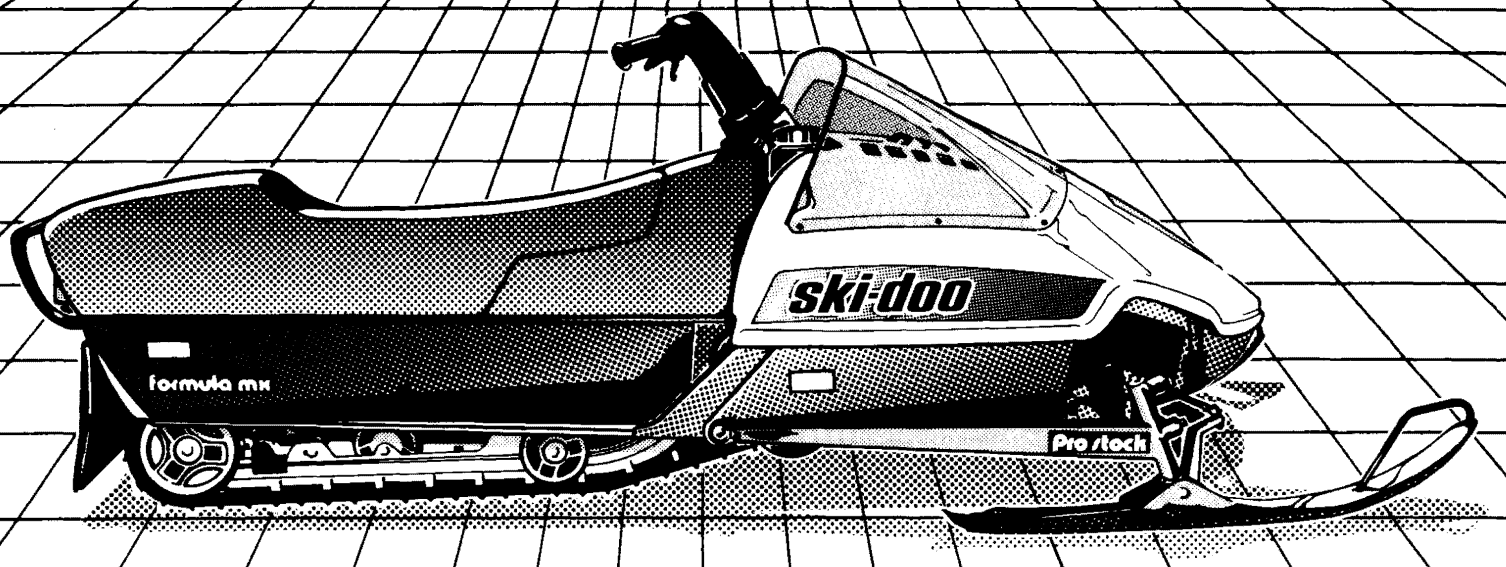

OPERATOR'S MANUAL

414 5537 00

FORMULA M/X PRO-STOCK

This vehicle has been designed for and should be used on an oval lake enduro or snow-cross racing only.

The performance of this snowmobiles significantly exceeds that of other snowmobiles you may have operated. Therefore, use of this vehicle should be restricted to experienced snowmobile racers.

◆ WARNING: The design of this snowmobiles differs considerably from most other snowmobiles. Maintenance and adjustment must be performed only by a knowledgeable mechanic. Always refer to operator manual.

All warranties on "1984" Formula M/X Pro-Stock either expressed or implied including any implied warranty of merchantability and any implied warranty of fitness for a particular purpose are hereby excluded and disclaimed.

TECHNICAL PUBLICATIONS
AFTER SALES SERVICE
BOMBARDIER INC.
VALCOURT, QUEBEC
CANADA, JOE 2LO

The following are trademarks of Bombardier Inc.

BOMBARDIER	EVEREST	MOTO-SKI
SKI-DOO	CITATION	FUTURA
ALPINE	OLYMPIQUE	SPIRIT
BLIZZARD	T'NT	NUVIK
CARRY-BOOSE	NORDIK	MIRAGE
ELAN	SKANDIC	SUPER SONIC
ELITE	SAFARI	ULTRA SONIC
GRAND PRIX SPECIAL		SONIC

Litho'd in Canada

®*Trademarks of Bombardier Inc.

November 1984
All rights reserved©Bombardier Inc.

FOREWORD

CONGRATULATIONS

This tough, sleek and fast racing vehicle is the result of incomparable teamwork between Bombardier designers, engineers, technicians and top racing drivers. Realizing that this vehicle has been purchased for racing only, this manual has been prepared to acquaint the owner/operator with the various vehicle controls and owner-related maintenance instructions.

This manual emphasizes particular information denoted by the wording and symbols:

◆ WARNING: Identifies an instruction which, if not followed, could cause personnal injury.

▼ CAUTION: Denotes an instruction which, if not followed, could severely damage vehicle components .

○ NOTE: Indicates supplementary information needed to fully complete an instruction.

Although the mere reading of such information does not eliminate the hazard, your understanding of the information will promote its correct use.

All the information, illustrations and component/system descriptions contained in this manual are correct at the time of publication. However, Bombardier Inc. reserves the right to make changes in design and specifications, and/or to make additions to or improvements in its products without imposing any obligations upon itself to install them on its products previously manufactured.

◆ WARNING: The engines and the corresponding components identified in this manual should not be utilized on product(s) other than those mentionned on the cover page of this manual.

Most specifications are given in both metric and customary units. Where precise accuracy is not required, some conversions are rounded to even numbers for easier use.

SAFETY-IN MAINTENANCE

OBSERVE THE FOLLOWING PRECAUTIONS:

- Throttle mechanism should be checked for free movement before starting engine.
- Engine should be running only when pulley guard is secured in place.
- Never run engine without drive belt installed. Running an unloaded engine can prove to be dangerous.
- Never run the engine when the track of the vehicle is raised off the ground.
- It can be dangerous to run engine with the hood removed.
- Gasoline is flammable and explosive under certain conditions. Always perform procedures in a well ventilated area. Do not smoke or allow open flames or sparks in the vicinity. If gasoline fumes are noticed while driving, the cause should be determined and corrected without delay.
- Your snowmobile is not designed to be operated on public streets, road or highways.
- Maintain your vehicle in top mechanical condition at all times.
- Always make sure no loose parts, tools or foreign objects are left in the engine compartment.
- Your snowmobile is not designed to be driven or operated on black top, bare earth, or other abrasive surfaces. On such surfaces abnormal and excessive wear of critical parts is inevitable.
- Only perform procedures as detailed in this manual. It is recommended that dealer assistance be periodically obtained on other components/ systems not covered in this manual. Unless otherwise specified, engine should be turned OFF for lubrication and maintenance procedures.
- Installation of other than "stock" equipment, including ski-spreaders, bumpers, pack racks, etc., could severely effect the stability and safety of your vehicle. Avoid "adding on" accessories that alter the basic vehicle configuration.
- The snowmobile engine can be stopped by activating the tether switch, turning OFF the key, or depressing emergency cut-out switch.
- This vehicle is not designed nor intended to be used for other than oval lake enduro, snow-cross race and oval racing

---

Please read and understand all other warnings contained elsewhere in this manual.

THIS MANUAL SHOULD REMAIN WITH THE VEHICLE AT THE TIME OF RESALE

LISTING OF AREA DISTRIBUTORS

CANADIAN DISTRIBUTORS

BOMBARDIER INC.
EASTERN CANADA DISTRIBUTION DIVISION
Atlantic Branch
P.O. Box 670
Shediac, New Brunswick, E0A 3G0
(506) 386-6117
Magdalen Island, Nova Scotia, New Brunswick, Prince Edward Island

Quebec Branch
1350 Nobel Boulevard
Boucherville, Quebec, J4B 1A1
(514) 655-6121
Province of Quebec

Ontario Branch
230 Bayview Drive
Barrie, Ontario, L4N 4Y8
(705) 728-8600
Province of Ontario

BROOKS EQUIPMENT LIMITED
1616 King, Edward Street
P.O. Box 985
Winnipeg, Manitoba, R3C 2V8
(204) 633-7247
British Columbia, Manitoba, Saskatchewan, Alberta, Yukon

CHARLES R. BELL LIMITED
Newfoundland, Labrador
Offices
- Riverside Drive
  P.O. Box 1050
  Corner Brook, Newfoundland, A2H 6J3
  (709) 634-3533
- 81 Kenmount Road
  P.O. Box 8127
  St-John's, Newfoundland, A1B 3N1
  (709) 722 6700

HUDSON'S BAY CO. LTD
165 Hymus Blvd
Pointe Claire, Quebec, H9R 1G2
(514) 697-8500
North-West Territories, Franklin District & Keewatin

AMERICAN DISTRIBUTORS

BOMBARDIER CORPORATION
All States (excluding Alaska)

SERVICE OFFICES
East Main Street Road
Malone, New York 12953
(518) 483-4411

4505 West Superior Street
P.O. Box 6106
Duluth, Minnesota 55806
(218) 628 2881

P.O. Box 1569
Idaho Falls, Idaho, 83401
(208) 529 9510

NATIONAL SALES OFFICE
O'Hare Lake Plaza
2350 Devon Avenue
Suite 150
Des Plaines, Illinois 60018
(312) 298-9540

MILLER EQUIPMENT AND RECREATIONAL CENTER
1049 Whitney Road
Anchorage, Alaska 99501
(907) 274-9513
Alaska

HOW TO IDENTIFY YOUR SNOWMOBILE

The main components of your snowmobile (engine, track and frame) are identified by different serial numbers. It may sometimes become necessary to locate these numbers for warranty purposes or to trace your snowmobile in the event of theft.

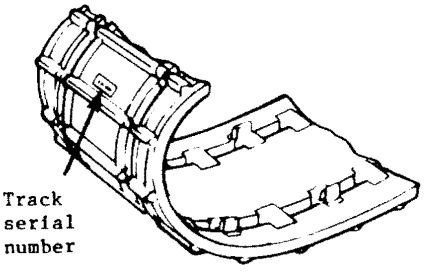

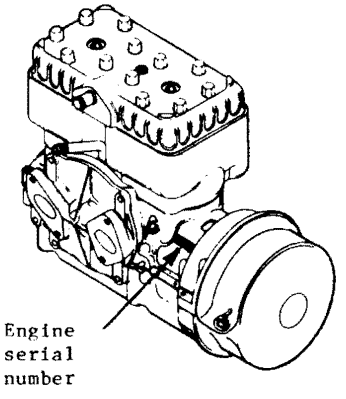

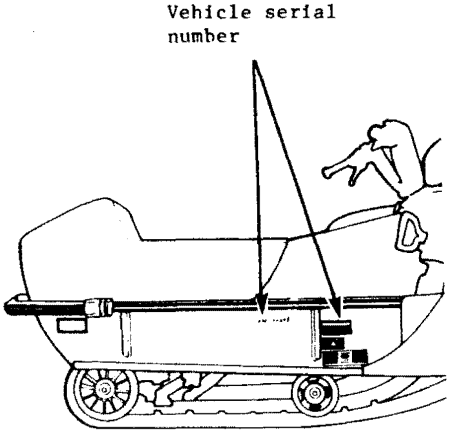

NOTE: We strongly recommend that you take note of all the serial numbers on your vehicle and supply them to your insurance company. It will surely help in the event a snowmobile is stolen.

INDEX

		PAGE
1.0	**CONTROLS / INSTRUMENTS**	
1.1	Throttle lever	8
1.2	Brake lever	8
1.3	Ignition/light switch	9
1.4	Headlamp dimmer switch	9
1.5	Emergency cut-out switch	9
1.6	Tether cut-out switch	10
1.7	Rewind starter handle	10
1.8	Primer	10
1.9	Adjustable steering handle	11
1.10	Tachometer	11
1.11	Temperature gauge	11
1.12	Fuel tank cap	11
1.13	Hood opening	12
2.0	**BREAK-IN PERIOD**	
2.1	Break-in	12
3.0	**FUEL MIXING**	
3.1	Recommended gasoline	14
3.2	Recommended oil	14
3.3	Fuel mixing procedure	15
3.4	Fuel/oil mixing charts (50 to 1 ratio)	16
4.0	**PRE-START CHECK**	
4.1	Check points	17
5.0	**STARTING PROCEDURE**	
5.1	Manual starting	18
5.2	Before riding	18
5.3	Emergency starting	19
6.0	**LUBRICATION**	
6.1	Frequency	20
6.2	Chaincase oil	21
6.3	Rotary valve system oil level	21

PAGE

7.0 MAINTENANCE

7.1	Pulley guard	22
7.2	Drive belt removal	22
7.3	Drive belt condition	23
7.4	New drive belt	24
7.5	Pulley alignment and drive belt tension	24
7.6	Brake condition	26
7.7	Brake adjustment	26
7.8	Spark plugs	27
7.9	Suspension	28
7.10	Suspension condition	29
7.11	Rear suspension adjustments	29
7.12	Track tension and alignment	30
7.13	Track spiking	32
7.14	Front suspension and steering linkages adjustments	32

8.0 PRE-SEASON PREPARATION 38

9.0 TROUBLE SHOOTING 39

10.0 TECHNICAL DATA 41

1.0 CONTROLS/INSTRUMENT

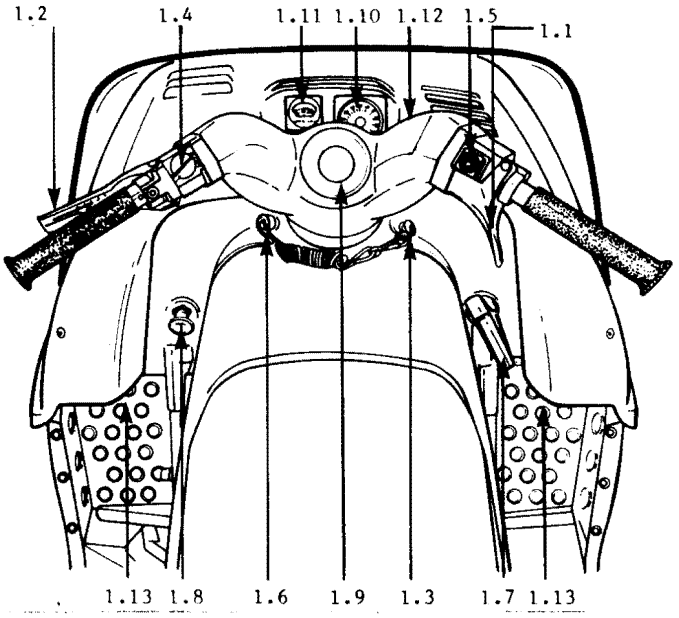

Fig. 1.0.1

1.1 THROTTLE LEVER

Located on right side of handlebar. When compressed, it controls the engine speed and the engagement of the transmission. When released, engine speed returns automatically to idle.

1.2 BRAKE LEVER

Located on the left side of handlebar. When compressed, the brake is applied. When released, it automatically returns to its original position. Braking effect is proportionate to the pressure applied on the lever and to the type of terrain and its snow coverage.

1.3 IGNITION/LIGHT SWITCH

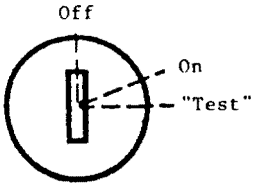

Fig. 1.3.1

Key operated, 3 position switch. To start engine, first turn key clockwise to ON position. To stop engine, turn key counter-clockwise to OFF position.

The lights are automatically ON whenever the engine is running.

1.4 HEADLAMP DIMMER SWITCH

The dimmer switch, located on left side of handlebar, allows correct selection of headlamp beam. To obtain high or low beam simply flick the switch.

1.5 EMERGENCY CUT-OUT SWITCH

A push pull type switch located on the right side of the handlebar. To stop the engine in an emergency, push the button to the lower off position and simultaneously apply the brake. To start engine, button must be at the upper on position.

Fig. 1.5.1

The driver of this vehicle should familiarize himself with the function of this device by using it several times on first outing. Thereby being mentally prepared for emergency situations requiring its use.

◆ WARNING: If the switch has been used in an emergency situation the source of malfunction should be determined and corrected before restarting engine.

1.6 TETHER CUT-OUT SWITCH

A pull switch located below the handlebar. Attach tether cord to wrist or other convenient location then snap tether cut-out cap over receptacle before starting engine. See Fig. 1.6.1.

TYPICAL

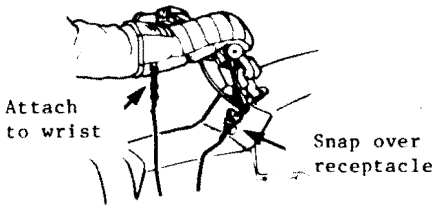

Fig. 1.6.1

If emergency engine "shut off" is required completely pull cap from safety switch and engine power will be automatically shut "off".

○ NOTE: The cap must be installed on the safety switch at all times in order to operate the vehicle.

◆ WARNING: If the switch is used in an emergency situation the source of malfunction should be determined and corrected before restarting engine.

1.7 REWIND STARTER HANDLE

Auto rewind type located on right hand side of vehicle. To engage mechanism, pull handle.

1.8 PRIMER

A push pull button located on left hand side of vehicle.

Pull and push button (2-3 times) to activate primer. The primer should always be used for cold engine starts. After engine is warm however, it is not necessary to use primer when starting.

1.9 ADJUSTABLE STEERING HANDLE

- Remove steering pad.
- Loosen the four (4) retaining screws.
- Adjust the handle to the desired position.

◆ WARNING: Do not adjust too high as the brake lever may contact the windshield when turning.

- Lock the steering handle in place by tightening the four (4) retaining screws to 26 N.m (19 ft-lbs).
- Reinstall steering pad.

1.10 TACHOMETER

The tachometer registers the impluses of magneto. Direct reading dial indicates the number of revolutions per minute (R.P.M.) of the engine. Maximum recommended engine speed is 7000 R.P.M.

▼ CAUTION: The tachometer is protected by a fuse, if tachometer stops operating, check fuse condition and if necessary replace. The fuse is 0.1 amp. Do not use a higher rated fuse as this can cause severe damge to the tachometer.

1.11 TEMPERATURE GAUGE

The gauge indicates engine coolant temperature. Normal operating temperature is 51-62°C (125-145°F). However, coolant temperature can vary depending on driving condition. If coolant temperature exceeds 95°C (200°F) reduce speed and run vehicle in loose snow or stop engine immediately.

◆ WARNING: To remove coolant tank cap, place a cloth over the cap and unscrew it to the first step to release the pressure. If this notice is disregarded loss of fluid and possible severe burns could occur.

1.12 FUEL TANK CAP

1.13 HOOD OPENING

Pull down the latches to unlock the hood from the anchor.

NOTE: Always lift hood gently up until stopped by restraining device.

WARNING: It is dangerous to run an engine with the hood open, unfastened or removed. Personal injury could result.

2.0 BREAK-IN PERIOD

2.1 BREAK-IN

With Bombardier-Rotax engines, a break-in period of 2 operating hours is required before running the vehicle at full throttle. During this period, brief full throttle accelerations and constant speed variation will contribute to a good break-in. Continued wide open throttle accelerations can be detrimental. Never let your engine overheat.

CAUTION: Incorrect or lack of a break-in period will result in engine horsepower loss.

NOTE: A new drive belt requires a break-in period of 15-25 km (10-15 miles).

2-Hour inspection

As with any precision piece of mechanical equipment, we suggest that after the first 2 hours of operation that your vehicle be checked. Remember that it is easier to remedy at this time than to allow the snowmobile to operate until a possible failure occurs.

THE 2 HOUR INSPECTION IS AT THE EXPENSE OF THE VEHICLE OWNER.

---

2 - HOUR INSPECTION CHECK LIST	√
Engine timing	
Spark plugs condition	
Carburetors adjustment	
Engine head nuts	
Engine mount nuts	
Muffler attachment	
Chaincase oil level	
Brake operation and linings condition	
Front suspension and steering linkages adjustment	
Rear and front suspension shock springs pre-load adjustment	
Skis alignment	
Ski runners condition	
Handlebar bolts, retorque to 26N.m (19 ft-lbs)	
Pulleys alignment and drive belt condition	
Track, cleating condition	
Track condition, tension and alignment	
Lubrication (steering, suspension, drive axle)	
Electrical wiring (loose connectors, stripped wires, damaged insulation), tighten all loose bolts, nuts and linkage.	
Operation of lighting system (hi/lo beam, brake lights, etc.) test operation of emergency cut-out switch and tether switch	
Check bolts torque	

3.0 FUEL MIXING

3.1 RECOMMENDED GASOLINE

CAUTION: Never experiment with different fuel or fuel ratios. Never use naphtha, methanol or similar products.

WARNING: Never "top up" the gas tank before placing the vehicle in a warm area. At certain temperatures, gasoline will expand overflow. Always wipe off any gasoline spillage from the snowmobile.

Use premium leaded or unleaded gasoline (octane number of 89 or higher).

3.2 RECOMMENDED OIL

Use "Bombardier Snowmobiles Injection Oil" (P/N 496 0133 00 - 1 liter) available from your dealer. This type of oil will flow at temperatures as low as minus 40°C (-40°F).

It is a blend of specially selected base oils and additives which provides outstanding lubrication, engine cleanliness and minimum spark plug fouling.

If "Bombardier Snowmobile Injection Oil" is unavailable, substitute with "Bombardier 50:1 Snowmobile Oil" .

CAUTION: Never use outboard or straight mineral oils.

The importance of using the correct fuel mixture cannot be overstressed. An incorrect fuel ratio results in serious engine damage. Recommended fuel ratio is 50/1. (40/1 during break-in period).

<u>SI units</u>

500 mL oil to 25 liters = 50/1

<u>Imperial units</u>

16 oz oil to 5 imp. gals = 50/1
or
500 mL oil to 5 1/2 imp. gals = 50/1

<u>U.S. units</u>

12 oz oil to 5 U.S. gals = 50/1

NOTE: To facilitate fuel mixing, oil should be kept at room temperature.

3.3 FUEL MIXING PROCEDURE

To mix the gasoline and oil always use a separate clean container. Never mix directly in your snowmobile tank. For best results, acquire two containers, either plastic or metal. Draw from one until empty then use the second one.

WARNING: Gasoline is flammable and explosive under certain conditions. Always manipulate in a well ventilated area. Do not smoke or allow open flames or sparks in the vicinity . If gasoline fumes are noticed while driving, the cause should be determined and corrected without delay. Never add fuel while the engine is running. Avoid skin contact with fuel at below freezing temperatures.

A) Pour approximately 4 liters (one gallon) of gasoline into a clean container.

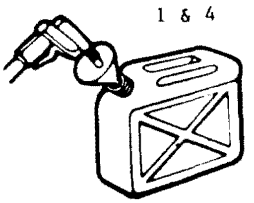

Fig. 3.3.1

B) Add the full amount of oil required.

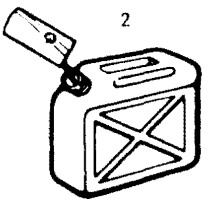

Fig. 3.3.2

C) Replace the container cap and shake the container thoroughly.

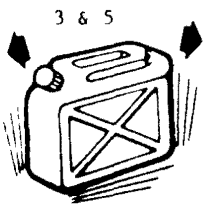

Fig. 3.3.3

D) Add the remainder of the gasoline.

E) Once again thoroughly agitate the container. Then using a funnel with a fine mesh screen to prevent the entry of foreign particles, pour the mixture into the snowmobile tank.

◆ WARNING: To prevent fuel spillage in the engine compartment, a funnel must always be used when filling the gas tank.

○ NOTE: When using pre-mixed fuel, always shake the container thoroughly as the oil has a tendency to settle.

3.4 FUEL/OIL MIXING CHARTS (50 TO 1 RATIO)

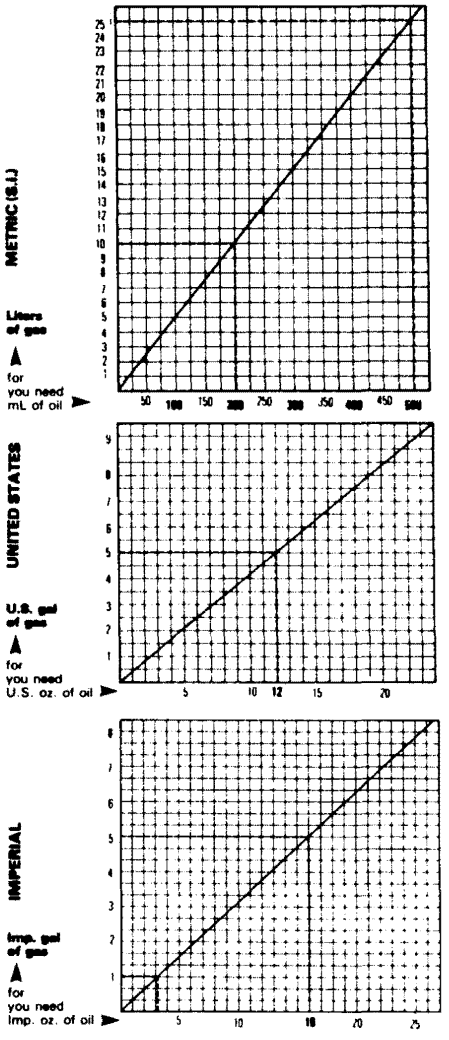

Use Bombardier Injection Oil

Fig. 3.4.1

4.0 PRE-START CHECK

4.1 CHECK POINTS

Activate the throttle control lever several times to check that it operates easily and smoothly. The throttle control lever must return to idle position when released.

Check that the skis and the track are not frozen to the ground or snow-surface and that steering operates freely.

Activate the brake control lever and make sure the brake fully applies-before the brake control lever touches the handlebar grip.

Check coolant level. Liquid should be 19-25 mm (3/4-1 in.) below filler neck. See Fig. 4.1.1. If additional coolant is necessary or if entire system has to be refilled, use a solution of 3 parts of anti-freeze for 2 parts of water (60% anti-freeze, 40% water). See cooling system in storage.

○ NOTE: Always use ethylene-glycol anti-freeze containing corrosion inhibitors specifically recommended for aluminium engines.

◆ WARNING: Before removing the radiator pressure cap place a cloth over the cap and unscrew it to the first step to release the pressure. Never drain or refill the cooling system when engine is hot. Loss of fluid and possibility of severe burns could occur, if this notice is disregarded.

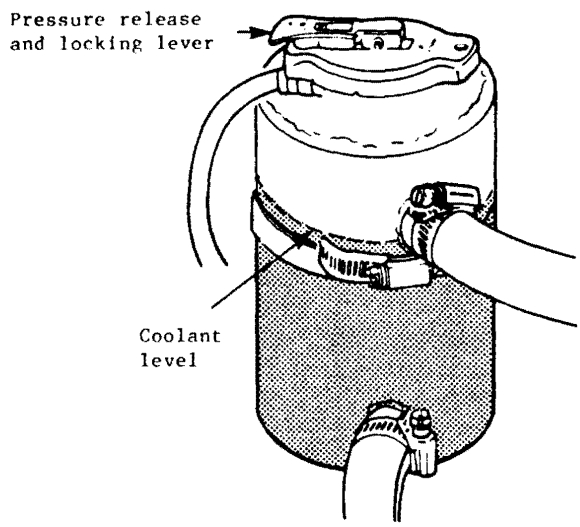

Fig. 4.1.1

Check fuel level.

Verify that the path ahead of the vehicle is clear of bystanders and obstacles.

◆ WARNING: Only start your snowmobile once all components are checked and functioning properly.

Test throttle control lever.

Check that the emergency cut-out switch is in the ON position. See Fig. 4.1.2.

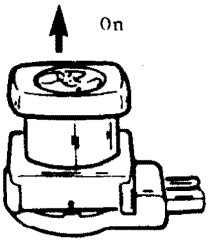

Upper position before starting engine

Fig. 4.1.2

Ensure the tether cut-out cap is in position and that the cord is attached to your clothing. See Fig. 1.6.1

Activate the primer (2 or 3 times).

◯ NOTE: Primer is not necessary when the engine is warm.

5.0 STARTING PROCEDURE

5.1 MANUAL STARTING

Insert the key in the ignition and turn to ON position.

Grasp manual starter handle firmly and pull slowly until a resistance is felt then pull vigorously. Slowly release the rewind starter handle.

◆ WARNING: Do not apply throttle while starting.

5.2 BEFORE RIDING

Check operation of the emergency cut-out switch, and tether switch. Restart engine.

◆ WARNING: If engine does not shut-off when applying the emergency cut-out switch and/or when pulling the tether cut-out cap, stop the engine by turning off the ignition key. Do not operate the vehicle further, see your dealer.

Allow the engine to warm before operating at full throttle.

▼ CAUTION: Since engine cooling is in effect only when the vehicle is in motion, it is recommended that you do not allow the engine to idle for more than brief periods. Prolonged idling may cause engine damage.

5.3 EMERGENCY STARTING

Should the rewind starter rope fray and break, the engine can be started with an emergency starter rope.

◆ WARNING: Do not start the vehicle by the drive pulley unless it is a true emergency situation, have the vehicle repaired as soon as possible.

Attach emergency rope to starter grip. Remove the belt guard from the vehicle and wind the emergency rope tight around the drive pulley between the sliding half and the roller guard. Start the engine as per usual manual starting. See Fig. 5.3.1.

◆ WARNING: When starting the vehicle in an emergency situation by the drive pulley, do not make a knot at the end of the emergency rope and do not reinstall the belt guard.

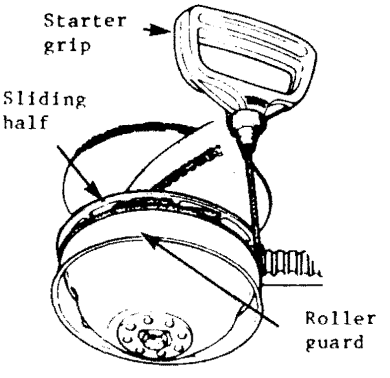

Fig. 5.3.1

6.0 LUBRICATION

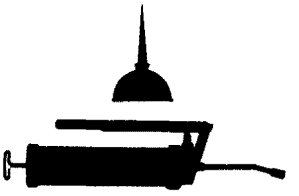

Fig. 6.0.1

6.1 FREQUENCY

Routine maintenance is necessary for all mechanized products, and the snowmobile is no exception. A weekly vehicle inspection contributes to the life span of the snowmobiles as well as retains safe and dependable operation. It is recommended that the steering system and suspension be lubricated periodically.

If the vehicle is operated in wet snow or in severe conditions these items should be lubricated more frequently.

◆ WARNING: Only perform such procedures as detailed in this manual. It is recommended that dealer assistance be periodically obtained on other components/systems not covered in this manual. Unless otherwise specified, engine should be turned OFF for all lubrication and maintenance procedures.

LUBRICATING POINTS
Steering mechanism
Front suspension mechanism
Rear suspension mechanism
Ski coupler bolts
Drive pulley
Driven pulley
Chaincase oil level (See sect. 6.2)
Rotary valve system oil level (See sect. 6.3)

◆ WARNING: The lubrication of the drive and/or driven pulley should be performed only by a qualified mechanic. A disassembly, cleaning, inspection and lubrication where applicable should also be performed by a qualified mechanic every 20 operating hours.

6.2 CHAINCASE OIL LEVEL

Check the oil level by removing the oil level cap plug.

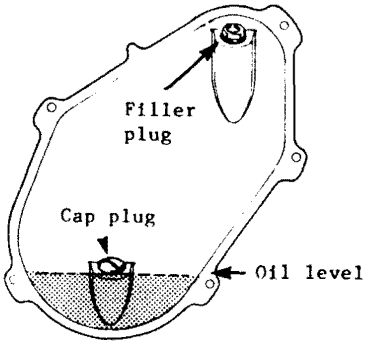

Fig. 6.2.1

The oil should be level with the bottom of the oil level orifice. See Fig. 6.2.1

NOTE: The chaincase oil capacity is approximately 200 mL (7 oz.)

6.3 ROTARY VALVE SYSTEM OIL LEVEL

Check oil level frequently. Level should be maintained at half of the tube height. If necessary, replenish using Bombardier Snowmobile Injection Oil (P/N 496 0133 00).

7.0 MAINTENANCE

The following maintenance chart indicated regular servicing schedules to be performed by a qualified mechanic or your servicing dealer. If these services are performed as suggested, your snowmobile will give you a good performance and seasons of low cost use.

WARNING: Only perform such procedures as detailed in this manual. It is recommended that dealer assistance be periodically obtained on other components/systems not covered in this manual. Unless otherwise specified, engine should be turned OFF for all lubrication and maintenance procedures.

SERVICE AND MAINTENANCE CHART	Weekly or every race event	Monthly
Drive belt condition	X	
Pulley alignment	X	
Drive pulley inspection		X
Brake condition	X	
Brake adjustment	X	
Front suspension mechanism adjustment	X	
Rear suspension mechanism adjustment		X
Track condition	X	
Track cleating condition	X	
Shock absorber pre-load adjustment	X	
Steering mechanism adjustment	X	
Muffler attachment inspection	X	
Engine head nut torque		X
Engine mount nut torque		X
Carburetor adjustment	X	
Rotary valve system oil level	X	
Chaincase oil level	X	
Coolant level	X	
Spark plugs condition	X	
Engine ignition timing		X
Ski runners condition	X	
Suspension slides condition	X	
Headlamp beam condition		X
General inspection	X	

7.1 PULLEY GUARD

◆ WARNING: Engine should be running only when pulley guard is secured in place.

7.2 DRIVE BELT REMOVAL

◆ WARNING: Never start or run engine without the drive belt installed. Running an unloaded engine is dangerous.

A) Tilt the hood and remove the belt guard.

B) Open the driven pulley by twisting and pushing the sliding half. Hold in fully open position.

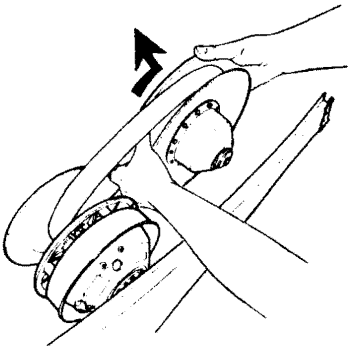

Fig. 7.2.1

C) Slip the belt over the top edge of the fixed half.

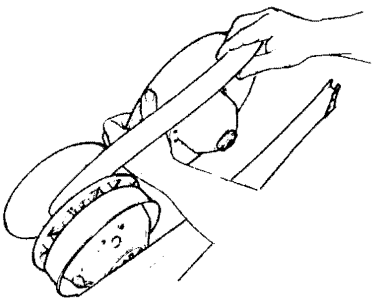

Fig. 7.2.2

D) Slip the belt out from the drive pulley and remove completely from the vehicle. To install the drive belt, reverse the procedure.

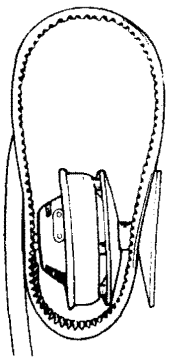

Fig. 7.2.3

7.3 DRIVE BELT CONDITION

Inspect belt for cracks, fraying or abnormal wear (uneven wear, wear on one side, missing cogs, cracked fabric). If abnormal wear is noted,

probable cause could be pulley misalignment, excessive R.P.M. with frozen track, fast starts without warm-up period, burred sheave, oil on belt or distorted spare belt.

Check the drive belt width.

New belt: 34.92 mm (1 3/8")

Wear limit: 32 mm (1 1/4").

7.4 NEW DRIVE BELT

When installing a new drive belt, break-in period of 25 km (15 miles) is strongly recommended.

NOTE: Always store a spare belt in a manner to allow its natural shape to be maintained.

7.5 PULLEY ALIGNMENT AND DRIVE BELT TENSION

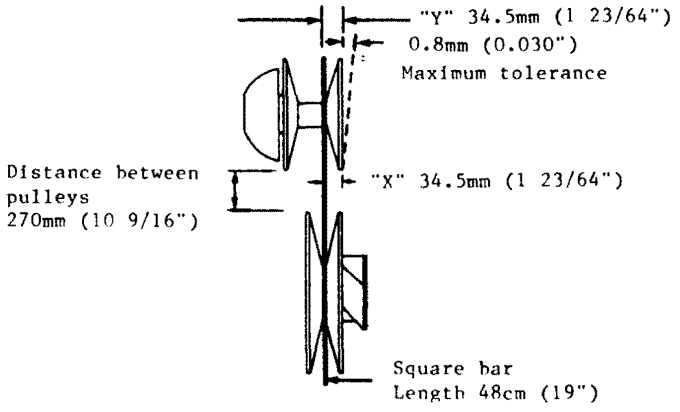

Fig. 7.5.1

CAUTION: Dimension "X" must never exceed dimension "Y". Dimension "Y" can exceed dimension "X" by 0.8 mm (0.030").

The distance between pulleys should be 270 mm (10 9/16") c.c. however, maximum vehicle performance is obtained when the drive belt deflects by 32 mm (1 1/4") when a pressure of 6.8 kg (15 lbs) is applied on the drive belt. See Fig. 7.5.2

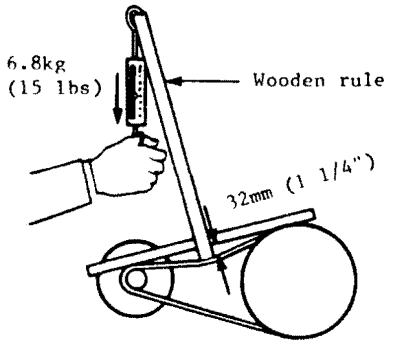

Fig. 7.5.2

To obtain the proper belt deflection the driven pulley is equipped with three adjusting screws which increases or decreases the distance between pulley halves while at the same time attaining exact belt tension. See Fig. 7.5.3.

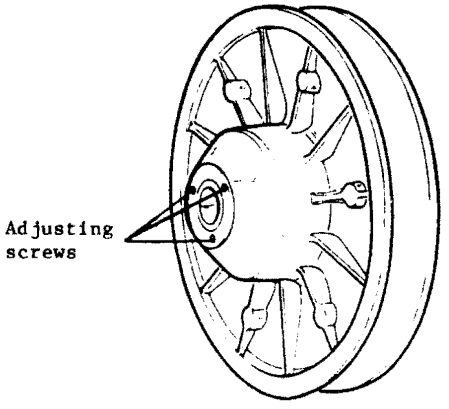

Fig. 7.5.3

Adjustment

Equally tighten or slacken the adjusting screws in order to obtain the recommended belt deflection.

▼ CAUTION: Ensure that the pulley width between each halves is the same all around. See Fig. 7.5.4

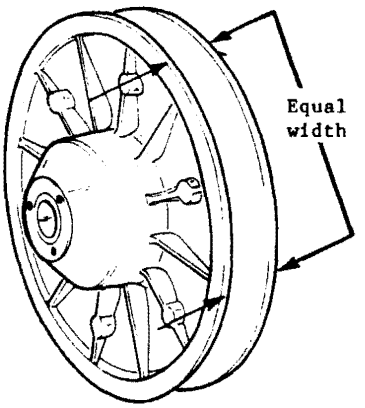

Fig. 7.5.4

7.6 BRAKE CONDITION

The brake mechanism on your snowmobile is an essential safety device. Keep this mechanism in proper working condition. Above all, do not operate your snowmobile without an effective brake system.

◆ WARNING: Brake pads must be replaced as soon as only 1 mm (1/32") of the fixed lining is still projecting out of caliper. Replacement must be performed by qualified mechanic.

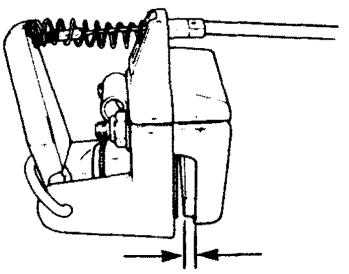

Minimum projection of
fixed pad: 1mm (1/32")

Fig. 7.6.1

7.7 BRAKE ADJUSTMENT

The brake system of these models is a self-adjusting type. However, for proper brake operation, check that there is no free play at the handle bar. While there is a distance of 57 mm ± 3 (2 1/4 ± 1/8") between the brake lever and the brake housing. See Fig. 7.7.1.

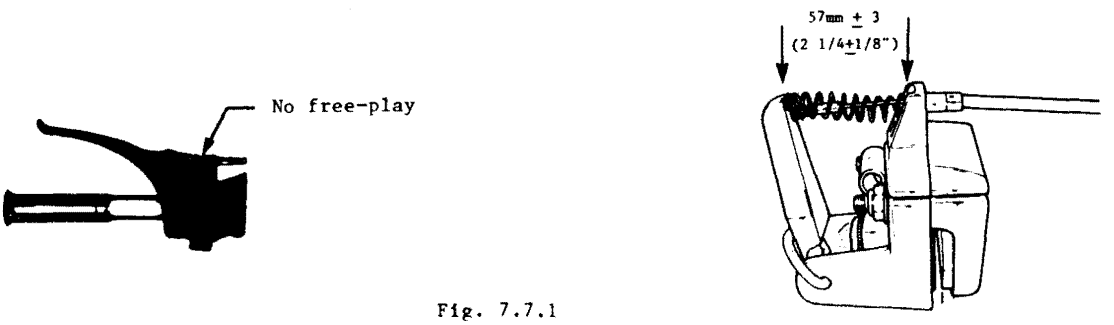

Fig. 7.7.1

After this adjustment, brake should apply fully when lever is approximately 13 mm (1/2") from the handlebar grip. If not, strongly pull the brake lever several times, this will actuate the self adjusting mechanism. See Fig. 7.7.2.

Fig. 7.7.2

7.8 SPARK PLUGS

Disconnect the spark plug wires and remove the spark plugs.

Check the condition of the plugs. See Fig. 7.8.1.

A brownish tip reflects ideal conditions. (Carburetor adjustments, spark plug heat range, etc., are correct).

A black insulator tip indicates fouling caused by: carburetor idle speed mixture and/or high speed mixture too rich, incorrect fuel mixture ratio, wrong type of spark plug (heat range), or excessive idling.

A light grey insulator tip indicates a lean mixture caused by: carburetor high speed mixture adjusted too lean, wrong spark plug heat range, incorrect fuel mixture ratio, or a leaking seal or gasket.

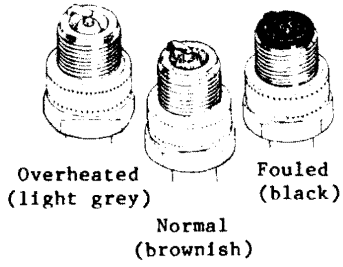

Fig. 7.8.1

CAUTION: If spark plug condition is not ideal, contact your authorized dealer.

Check spark plug gap using a wire feeler gauge.

Reinstall plugs and connect wires.

7.9 SUSPENSION

Your new "Formula MX Pro-Stock Snowmobile" is equipped with the latest in suspension components. The rising rate damping system uses "Freon cells/oil" shock absorbers.

Function

The principal advantage behind the rising rate damping system is to offer soft suspension during the initial movements of the skis and/or track travel and firm damping at full suspension travel. This is accomplished by using a bell crank type lever system.

Suspension technical data

SUSPENSION TECHNICAL DATA

LOCATION		DESCRIPTION	AVAILABILITY	OVERALL LENGTH	COLOR CODE	SPRING RATE
Front suspension		Shock absorber	Standard	335 mm (13.2")	N.A.	N.A.
		Shock spring	Standard	184 mm (7.25")	Brown/red	49N/mm (280 lbf.in)
Rear suspen-sion	Middle	Shock absorber	Standard	320 mm (12.6")	N.A.	N.A.
		Shock spring	Standard	176 mm (6.92")	Brown/white	18N/mm (100 lbf.in)
		Shock spring	Optional	216 mm (8.50")	Brown/orange	14 N/mm (80 lbf.in)
	Rear	Shock absorber	Standard	290 mm (11.4")	N.A.	N.A.
		Shock spring	Standard	267 mm (10.5")	Brown/silver	56N/mm (320 lbf.in)
		Shock spring	Optional	267 mm (10.5")	Brown/green/gold	70N/mm (400 lbf.in)

7.10 SUSPENSION CONDITION

Visually inspect all suspension components including slider shoes, shock absorbers, springs wheels, linkages, sway bar, etc.

NOTE: During normal driving, snow will act as a lubricant and coolant for the slider shoes. Extensive riding on ice or sanded snow will create excessive heat build-up and cause premature slider shoe wear.

7.11 REAR SUSPENSION ADJUSTMENT

Track weight distribution

Weight distribution is very important since it affects the kind of riding for which the machine is used. For instance, if the machine is used in deep snow, it should have the most possible weight on the track to get it up on the snow fast with minimum slippage. If the machine is used for hard pack trails, it should have greater weight on the skis for a better steering effect.

To increase weight on track turn the front suspension arm adjusting nut counter-clockwise. To increase weight on the skis turn the nut clockwise. See Fig. 7.11.1.

As a basic setting adjust weight transfer as follows: Lift the back portion of the snowmobile off the ground. Turn the front arm adjusting screw in order that the front portion of the track will touch the ground 6.3 mm (1/4") before the back portion.

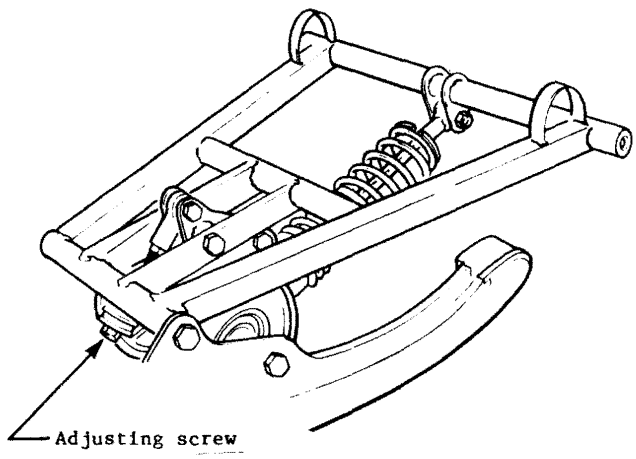

Suspension shock spring pre-load adjustment

Only both springs shock of front suspension and middle shock spring of rear suspension are adjustable.

The shock absorber has a five (5) position cam collar located at the bottom of the shock. If a stiffer or softer action is desired, the spring pre-load may be increased or decreased by adjusting the cam.

To adjust, remove the shock from the vehicle (required on front suspension only). Clamp the shock absorber lower mount in a vise and press the spring down with appropriate tools to remove the spring collar. Turn the cam collar to desired position. Reinstall the shocks in reverse order.

7.12 TRACK TENSION AND ALIGNMENT

Tension

Lift the rear of vehicle and support with a mechanical stand. Allow the slide to extend normally. The gap should be between 3.2 mm (1/8") and 6.3 mm (1/4") between the slider shoe and the bottom inside of the track when a weight of 2.95 kg (6.5 lbs) is applied on track. If the track tension is too loose, the track will have a tendency to thump. See Fig. 7.12.1.

TYPICAL

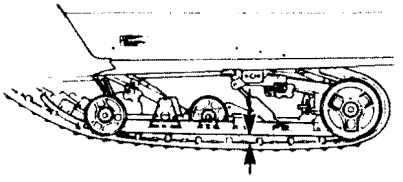

3.2mm (1/8") & 6.3mm (1/4")

Fig. 7.12.1

CAUTION: Too much tension will result in power loss and excessive stresses on suspension components.

If necessary to adjust, loosen the rear idler wheel retaining screw and the adjuster bolt lock nut; then loosen or tighten the adjuster bolts located on the inner side of the rear idler wheels. If correct tension is unattainable, contact your dealer. See Fig. 7.12.1.

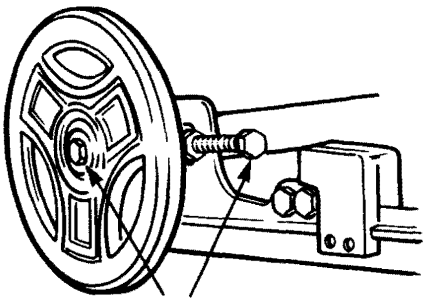

NOTE: Track tension and alignment are inter-related. Do not adjust one without the other.

Alignment

Start the engine and accelerate slightly so that track turns slowly. Check that the track is well centered; equal distance on both sides between edges of track guides and slider shoes. See Fig. 7.12.3

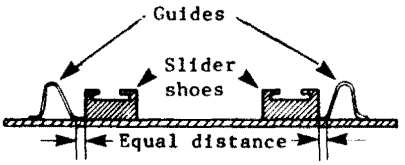

Fig. 7.12.3

WARNING: Before checking track alignment, ensure that the track is free of all particles which could be thrown out while track is rotating. Keep hands, tools, feet and clothing clear of track. Ensure no one is standing in close proximity to the vehicle.

To correct, stop the engine, loosen the rear idler wheels retaining screws then loosen the lock nuts and tighten the adjuster bolt on side where the slider shoe is the furthest to the track insert guides.

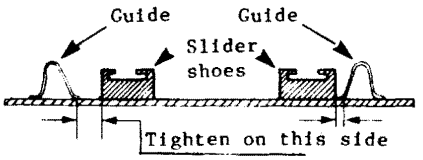

Fig. 7.12.4

Tighten lock nuts and recheck the alignment. Ensure to retighten the idler wheel retaining screws. See Fig. 7.12.5.

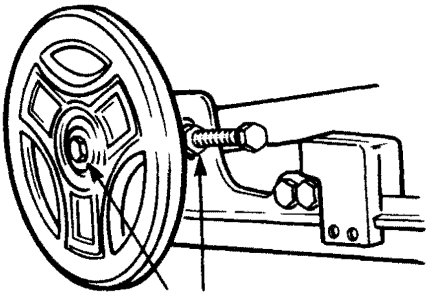

Tighten

7.13 TRACK SPIKING

At track spiking, special attention must be given to the followings:

A) The center band 25 mm (1") width of track must not be spiked to prevent heat exchangers damages.

B) Spike height must not exceed 9.5 mm (3/8").

C) "Hooker" studs can be used on track cleats.

D) Ensure not to install spikes below tunnel protectors.

▼ CAUTION: The tunnel protectors must be checked frequently and replaced as necessary.

◆ WARNING: Bombardier Inc. does not recommend track spiking for safety reasons. If this operation is performed it is at the owner's risk and the vehicle should be used only on closed competition circuits.

7.14 FRONT SUSPENSION AND STEERING LINKAGES ADJUSTMENTS

The suspension and steering system incorporated into the "Formula MX Pro-Stock" has several adjustable components. As their correct operations are interdependent, they must be adjusted as per the following sequences:

▼ CAUTION: Inspect mechanism for tightness of components (tie rods, ball joints, drop and drag links, shock lever arms, sway bar, ski couplers, skis, ski runners, etc.). If necessary, replace or retighten.

<u>Skis width and ski legs camber adjustments</u>

Skis width: 98.4 cm (38 3/4") (Carbide edge to carbide edge) measurement taken below the ski leg.

Ski legs camber: 0°

NOTE: The skis width and ski legs camber must be adjusted accordingly.

If adjustment is required:

Lift the front of the vehicle off the ground with ski runners at approx. 1.5 mm (1/16") from the floor. Position the handlebar at the center position with the skis pointed towards front. Adjust skis width first.

A) As a starting point set tie rods length to (A-B) 36 cm (14.7") and (C-D) 47 cm (18.5") (measure taken at outside head retaining screws). See Fig. 7.14.1. To do so loosen the tie rods (A-B-C-D) lock nuts and turn rods manually to the basic setting. Finalize adjustment using the rods ensuring that the upper and lower rods length are equal on both sides.

B) Using an appropriate angle finder positioned on ski legs housing, check the ski leg's camber. Camber must be 0°. If not, adjust as per rod (A-B-C-D). See Fig. 7.14.1.

Re-check ski's width and ski legs camber adjustments and correct if necessary. Retighten the tie rods lock nuts firmly.

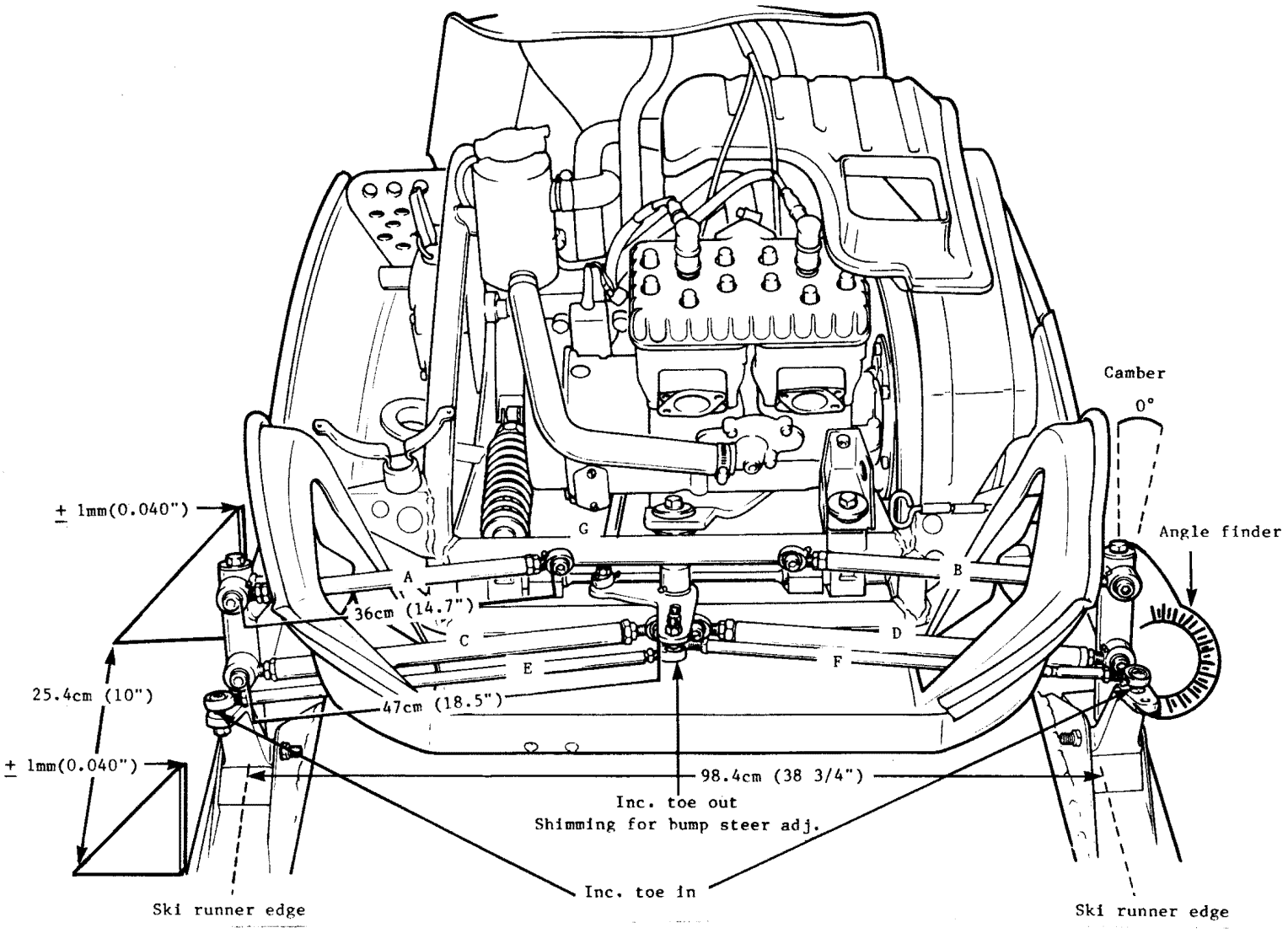

Fig. 7.14.1

◆ WARNING: The front suspension tie rods retaining screws must be safety wired or severe damages will occur.

Drag links

○ NOTE: Whenever the drag links are to be reinstalled. Ensure to mount them with the slotted portion over the cross shaft index mark. See Fig. 7.14.2.

Shock lever arms

○ NOTE: Whenever the shock lever arm's are to be reinstalled, ensure that the lever arms/sway bar index marks are facing each other.

Drop links

Drop links length:

The drop links must have an equal length of 11.1 cm (4.375")(Center to center of the tie rod ends retaining bolts). To adjust, loosen lock nuts and turn rod in appropriate direction until correct length is obtained. Retighten the lock nuts firmly. See Fig. 7.14.2.

Drop links shimming:

With the front of the vehicle equally lifted off the ground (the ski runners at approx. 1.5 mm (1/16") from the ground) from a front view, the drop links must be in perfect vertical position. If not, shim the appropriate ends using the washer (P/N 391 4027 00, 15/32 x 59/64 x 0.060") until correct position is obtained. Firmly retighten the allen screws. See Fig. 7.14.2.

CAUTION: Never use more than two (2) washers on one end.

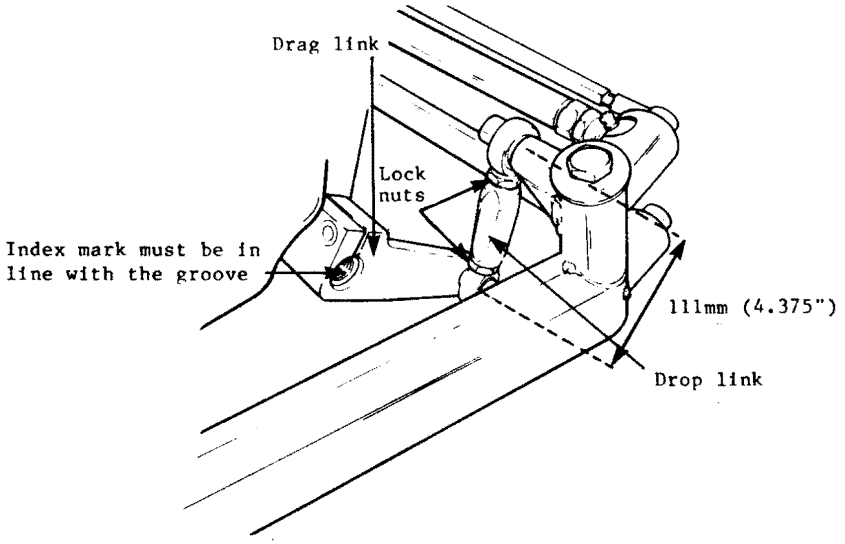

Fig. 7.14.2

Skis toe out adjustment

Skis should have a toe out of 3 mm (1/8"). To check, measure the distance between each ski at the front and rear of the skis. The front distance should be 3 mm (1/8") more than the rear with the handlebar at the straight ahead position.

NOTE: Close the front of the skis manually to eliminate all slack from the steering mechanism.

If skis adjustment is required:

Loosen the lock nuts of the tie rods (E-F). See Fig. 7.14.1. Turn the tie rod manually until the skis are properly aligned. Firmly retighten the lock nuts.

The handlebar should also be horizontal when the skis are pointed towards the front.

To adjust handlebar:

Loosen the lock nuts of the tie rod (G). See Fig. 7.14.1. Turn the tie rod manually until the handlebar is horizontal. Retighten the lock nuts firmly.

Bump steer adjustment

Position the vehicle on a plane surface. Equally lift the front of the vehicle off the ground in order that the ski runners are 0.8-1.6 mm (1/32-1/16") from the ground. Disconnect drop links. The adjustment must be performed on one (1) ski at a time, so firmly secure the other ski during adjustment. Position two (2) appropriate squares against outside portion of the ski to be checked, at the front and rear (approx. 25.4 cm (10") between blocks). See Fig. 7.13.1.

Lift the ski equally to the upside position and then measure and compare the distance between blocks and skis. The difference between these two measurements must not exceed 1.0 mm (0.040"). If measurements indicate too much toe out, shim tie rod ends (E and/or F) using approx. two (2) washers (P/N 399 9085 00, 7/8 x 3/8 x 0.055 x 0.080") at a time. See Fig. 7.13.1.

If measurements indicate too much toe in, remove washer at tie rod ends until correct measurement is obtained. Repeat the procedure on the other ski. Retighten nuts and screws firmly (apply "loctite" 242 blue, medium strength on threads).

CAUTION: Never put more than four (4) washers on one tie rod end. Replace elastic stop nuts used more than twice.

8.0 PRE-SEASON PREPARATION

To simplified the pre-season preparation we have drawn up a small chart. The chart indicates servicing points to be performed by you and your servicing dealer. If these services are performed as suggested, your vehicle will give you many hours of fun and low cost use.

IMPORTANT: Observe all WARNINGS and CAUTIONS mentioned throughout this manual which are pertinent to the item being checked. When component conditions seem less than satisfactory, replace with genuine Bombardier parts or suitable equivalent.

PRE-SEASON PREPARATION CHART
Change spark plugs *
Check chaincase oil level
Check rotary valve oil level
Replace fuel filter
Refill gas tank
Check track condition, tension, alignment
Check and lubricate suspension
Inspect drive belt and install
Check throttle cable for damage and free operation
Check front suspension and steering linkage adjustments
Check electrical wiring diagram(broken wire, damaged insulation)
Inspect condition of starting rope
Check tightness of all bolts, nuts and linkages
Check rear suspension adjustment
Check coolant condition and level
Inspect seals for possible cuts or leaks
Inspect brake condition and operation
Check suspension shock absorbers and springs
Set engine timing
Check pulleys, verify components and clean. Lubricate
Adjust carburetors

*NOTE: Before installing new spark plugs, it is suggested to burn excess storage oil by starting the engine, using the old spark plugs. Only perform this operation in a well ventilated area.

9.0 TROUBLE SHOOTING

NOTE: The possible causes have been listed in an order of frequency. Therefore, items should be checked out in the same order as mentioned in the trouble shooting guide.

SYMPTOMS	POSSIBLE CAUSES	SOLUTIONS
Engine turns over but fails to start or starts with difficulty	1. No fuel to the engine	Check the tank level and fill it up. Check for possible clogging of fuel line, item 4.
	2. Flooded engine	Remove wet spark plugs, turn ignition to OFF and crank engine several times. Install clean dry spark plugs. Start engine following usual starting procedure. If engine continues to flood, see your dealer.
	3. Spark plug/ignition	Check for fouled or defective spark plug. Disconnect spark plug wire, unscrew plug and remove from cylinder head. Reconnect wire and ground exposed plug on engine cowl, **being careful to hold away from spark plug hole.** Follow engine starting procedure and check for spark. If no sparks appear, replace spark plug. If trouble persists, contact your dealer.
	4. Clogged fuel line (water or dirt)	Remove and clean the fuel filter. Change filter cartridge if necessary. Check condition and connections of fuel lines. Check the cleanliness of fuel tank.
	5. Incorrect carburetor adjustment	Contact your dealer.
	6. Incorrect injection pump adjustment	Contact your dealer.
	7. Engine timing	Engine timing may be incorrect or out of adjustment. Contact your dealer.
	8. Poor engine compression	Running with a lean fuel mixture may produce excessive engine wear resulting in poor engine compression. If this occurs, contact your dealer at once.
Engine will not turn manually	1. Seized engine	In the case of a seized engine contact your dealer.

SYMPTOMS	POSSIBLE CAUSES	WHAT TO DO
Engine lacks acceleration or power	1. Fouled or defective spark plug	Check item 3 of "Engine turns over but fails to start or starts with difficulty"
	2. Clogged fuel line (water or dirt)	Check fuel line condition. (See item 4 of "Engine turns over but fails to start or starts with difficulty").
	3. Carburetors	Contact your dealer.
	4. Ignition	First check item 2 and 3 of "Engine turns over but fails to start or starts with difficulty". If the ignition system still seems faulty, contact your dealer.
	5. Engine	If unable to locate specific symptoms, contact your dealer.
Engine continually backfires	1. Spark plug	Check item 3 of "Engine turns over but fails to start or starts with difficulty".
	2. Overheated	Coolant level too low. Refill. Carburetor too lean, contact your dealer.
	3. Engine timing incorrectly set	Contact your dealer.
Snowmobile cannot reach full speed	1. Drive Belt	Check for damaged or worn drive belt. Replace if necessary.
	2. Incorrect track adjustment	Check track tension and alignment. Readjust to specifications. (See Maintenance Section).
	3. Engine	Check item 1 to 5 of "Engine lacks acceleration or power."
	4. Pulley misaligned	Contact your dealer.

10.0 TECHNICAL DATA

MODEL: **FORMULA MX PRO STOCK**

PRODUCTION CODE: **3722**

Legend

N/A : Not applicable

MOTEUR
ENGINE

1. TYPE DE MOTEUR:
   ENGINE TYPE — 465

2. EMPLACEMENT:
   LOCATION — Front mounted

3. REFROIDISSEMENT:
   COOLING — Liquid

   thermostat °C: 43°C (110°F)
   ajustement de la courroie du ventilateur:
   fan belt adjustment

4. LUBRIFICATION (ET TYPE D'HUILE):
   LUBRICATION (AND OIL TYPE) — Pre-mix Bombardier oil

5. AJUSTEMENT DE LA POMPE À HUILE:
   OIL PUMP ADJUSTMENT — ---

6. MÉLANGE ESSENCE/HUILE:
   GAS/OIL RATIO — Ratio 50:1

7. TYPE D'ESSENCE:
   GAS TYPE — Premium unleaded

8. TYPE D'ÉCHAPPEMENT:
   EXHAUST TYPE — Single calibrated muffler

9. DÉMARRAGE:
   STARTING — Manual

10. QUANTITÉ DE CYLINDRES:
    CYLINDER QTY — 2

11. ALÉSAGE STANDARD:
    STANDARD BORE — 69.50 mm

12. 1er SURDIMENSIONNÉ:
    1st OVERSIZE — 69.75 mm

13. 2e SURDIMENSIONNÉ:
    2nd OVERSIZE — N/A

14. COURSE: STROKE		61mm
15. CYLINDRÉE: DISPLACEMENT		462.8 cc
16. TAUX DE COMPRESSION (effectif) COMPRESSION RATIO (effective)		7.0
17. RÉGIME MAXIMUM D'OPÉRATION tr/mn: MAXIMUM OPERATING r.p.m.		7500 R.P.M.
18. TYPES DE SEGMENT DE PISTON/NOMBRE: PISTON RING TYPE & QUANTITY		1 LST 1 R } 2
19. OUVERTURE DU SEGMENT: RING END GAP	segment neuf new ring	MIN: .20mm(.008") MAX: .35mm(.014")
	segment usé used ring	MAX: 1.0mm(.039")
20. ÉCART ENTRE LE SEGMENT ET LA GORGE DU PISTON: RING/PISTON GROOVE CLEARANCE		MIN: .04mm(.002") MAX: .20mm(.008")
21. JEU CYLINDRE/PISTON: PISTON/CYLINDER CLEARANCE		MIN: .070mm (.0028") MAX: .20mm(.008")
22. CONICITÉ DU CYLINDRE: CYLINDER TAPER		MAX: .08mm(.003")
23. OVALISATION DU CYLINDRE: CYLINDER OUT OF ROUND		MAX: .05mm(.002")
24. COURBURE DU VILEBREQUIN: CRANKSHAFT EXCENTRICITY		MAX: .10mm(.004")
25. JEU AXIAL DE LA TÊTE DE BIELLE: CONNECTING ROD AXIAL PLAY		MIN: .40mm(.016") MAX: 1.00mm(.039")
26. POSITION DES MARQUES DE LA VALVE ROTATIVE: ROTARY VALVE MARKS POSITION		Opening: 150° Closing: 49°

AUTRES INFORMATIONS
OTHER INFORMATIONS

27. N/A

28. N/A

29. N/A

30. N/A

31. C.S. (N•m) ÉCROUS DE CULASSE: CYLINDER HEAD NUTS TORQUE		22 N.m (16 ft-lbs or 180 in.-lbs)
32. C.S. (N•m) ÉCROUS (BOULONS) DU CARTER (identifiés): CRANKCASE NUTS (BOLTS) (identified) TORQUE	M.6	9 N.m (6 ft-lbs or 84 in.-lbs)
	M.8	22 N.m (16 ft-lbs or 180 in.-lbs)
33. C.S. (N•m) ÉCROU DE LA MAGNÉTO: MAGNETO RING NUT TORQUE		95 N.m (70 ft-lbs)
34. C.S. (N•m)ÉCROU DU VENTILATEUR: FAN NUT TORQUE		N/A
35. C.S. (N•m) ÉCROUS CARTER/SUPPORT MOTEUR CRANKCASE/ENGINE SUPPORT NUTS TORQUE		38 N.m (28 ft-lbs)
36. C.S. (N•m) BOULONS DU COLLECTEUR D'ÉCHAPPEMENT: EXHAUST MANIFOLD BOLTS TORQUE		22 N.m (16 ft-lbs)
37. C.S. (N•m) BOULONS OU ÉCROUS DU SUPPORT DU DÉMARREUR ÉLEC: ELECTRICAL STARTER BOLTS OR NUTS TORQUE		N/A

38. C.S. (N•m) ÉCROUS DE CYLINDRE/ CARTER (moteurs à liquide)
CYLINDER/CRANKCASE NUTS (L.C. engines) TORQUE — 21 N.m (15 ft-lbs or 180 in.-lbs)

AUTRES COUPLES DE SERRAGE:
OTHER TORQUES

39. N/A

40. N/A

41. N/A

42. N/A

43. N/A

44. TYPE DE SYSTÈME ÉLECTRIQUE:
ELECTRICAL SYSTEM TYPE — CD

45. PUISSANCE DU SYSTÈME D'ÉCLAIRAGE (W)
ELECTRICAL SYSTEM OUTPUT (W) — 160 W.

46. RÉGLAGE DE L'ALLUMAGE: DIRECT:
IGNITION TIMING — 2.52 mm (.099") BTDC

réglage stroboscopique à 6000 tr/mn
stroboscopic timing at 6000 r.p.m.

47. RÉGLAGE DES CONTACTS DE RUPTEUR(S):
BREAKER POINTS SET ADJUSTMENT — N/A

48. ARRACHÉ MAGNÉTIQUE DES BOBINES:
COIL BREAK-AWAY GAP — N/A

49. JEU ENTRE LE VOLANT MAGNÉTIQUE ET LA BOBINE DE DÉCLENCHEMENT TRIGGER/COIL/MAGNETO RING GAP	N/A
50. TYPE DE BOUGIE: SPARK PLUG TYPE	NGK - BR8ES
51. ÉCARTEMENT DES ÉLECTRODES DE LA BOUGIE: SPARK PLUG GAP	.040 mm (.016")
52 à 57: RÉSISTANCE (ohm) incluant la tolérance: *RÉSISTANCE (ohm) tolerance included*	5 Kohms
52. BOBINE GÉNÉRATRICE DE L'ALLUMAGE: GENERATOR (CHARGING) COIL	LOW SPEED: 120-180 OHMS HIGH SPEED: 2.8 - 4.2 OHMS
53. BOBINE D'ÉCLAIRAGE PRINCIPALE: MAIN LIGHTING COIL	0.21 - 0.31 OHM
54. BOBINE D'ÉCLAIRAGE SECONDAIRE: SECONDARY LIGHTING COIL	N/A
55. BOBINE DE DÉCLENCHEMENT: TRIGGER COIL	N/A
56. BOBINE DE HAUTE TENSION/CIRCUIT PRIMAIRE: HIGH TENSION COIL/PRIMARY CIRCUIT	0.23 - 0.43 OHM
57. BOBINE DE HAUTE TENSION/CIRCUIT SECONDAIRE: HIGH TENSION COIL/SECONDARY CIRCUIT	2.45 - 4.55 K OHMS
58. CAPACITÉ DU CONDENSATEUR (mfd): CONDENSER CAPACITY (mfd)	N/A

AUTRES INFORMATIONS:
OTHER INFORMATIONS

59. N/A

60. N/A

61. N/A

62. N/A

63 à 71: CARBURATION
CARBURATION 2 - VM 30

63. NOMBRE ET NUMÉRO DU CARBURATEUR: CARBURETOR QTY AND NUMBER	PTO:	141	MAG:	142 (2)
64. GICLEUR PRINCIPAL: (niveau de la mer à -20°C) MAIN JET (sea level at -20°C)	PTO:	240	MAG:	250
65. GICLEUR DE RALENTI: PILOT JET	PTO:	45	MAG:	45
66. VIS DU MÉLANGE DE RALENTI: AIR SCREW	PTO:	1.5	MAG:	1.5
67. AIGUILLE: NEEDLE	PTO:	6DH4-3	MAG:	6DH4-3
68. GICLEUR D'AIGUILLE: NEEDLE JET	PTO:	P-4(159)	MAG:	P-4(159)
69. DÉCOUPURE DU TIROIR D'ACCÉLÉRATEUR: THROTTLE SLIDE CUT-AWAY	PTO:	2.5	MAG:	2.5

70. RÉGIME DU RALENTI (tr/mn):
IDLE SPEED (r.p.m.) 1800 R.P.M.

71. AJUSTEMENT DU TIROIR D'ACCÉLÉRATEUR:
THROTTLE SLIDE ADJUSTMENT Bring throttle lever against handlebar grip. Adjust throttle slides flush with the upper carburetor bores.

AUTRES INFORMATIONS
OTHER INFORMATIONS

72. N/A

73. N/A

74. N/A

75. N/A

CIRCUIT ÉLECTRIQUE DU VÉHICULE
VEHICULE ELECTRICAL SYSTEM

76. RÉGULATEUR DE VOLTAGE: VOLTAGE REGULATOR	Minks LR3 (20 Amp., 13.8V±.5) 410908800
77. REDRESSEUR: RECTIFIER	N/A
78. RÉGULATEUR D'ALLUMAGE: IGNITION REGULATOR	N/A
79. AMPOULE DU PHARE: HEADLAMP BULB	60/60W
80. NORME D'AJUSTEMENT DU PHARE (SAE): HEADLAMP ADJUSTMENT STANDARD (SAE)	Distance 7.6m(25') from a wall.Center of high intensity on high beam must be 50mm(2") lower than the horizontal line of headlanp with rider seated and suspension correctly adjusted.
81. AMPOULE DU FEU ARRIÈRE/ARRÊT: TAIL & STOP BULB	5/21W
82. AMPOULE DU COMPTE-TOURS: TACHOMETER BULB	5W
83. AMPOULE DE L'INDICATEUR DE VITESSE: SPEEDOMETER BULB	N/A
84. ALTERNATEUR: ALTERNATOR	N/A
85. BATTERIE: amp/heure BATTERY amp/hour	N/A
86. FUSIBLES: FUSE	
a) interrupteur d'allumage: ignition switch	N/A
b) câblage principal: main wiring	N/A
c) compte-tours: tachometer	0.1 Amp.

d) solénoïde du démarreur N/A
starter solenoïd

e) autres
other N/A

87. SCHÉMA ÉLECTRIQUE:
ELECTRICAL DIAGRAM

AUTRES INFORMATIONS:
OTHER INFORMATIONS

88. N/A

89. N/A

90. N/A

91. N/A

TRANSMISSION

92. TYPE DE POULIE MOTRICE: DRIVE PULLEY TYPE	Bombardier sq. shaft, 3 ramps
93. POIDS DE LA POULIE MOTRICE: DRIVE PULLEY WEIGHT	5.39 kg (11.86 lbs)
94. CUVETTE NO.: CUP NO.	
95. LEVIER CENTRIFUGE (identification): PRESSURE LEVER	A8S 504-2504-00
96. ROULEAUX (identification) ROLLERS	504-2420-00
diamètre diameter	15.49 grams
97. POIDS DE L'ENSEMBLE LEVIER/ROULEAU: WEIGHT OF LEVER/ROLLER ASS'Y	132 grams/ass'y
98. PROFIL DE RAMPE (dessin): RAMP PROFIL (drawing)	
99. RESSORT couleur no. SPRING color Beige	414-4332-00
100. LONGUEUR DU RESSORT INCLUANT TOLÉRANCE: SPRING LENGTH WITH TOLERANCE	110,49 ± 1.5 mm (4.35" ± .060)
101. RÉGIME D'EMBRAYAGE DE LA POULIE MOTRICE: DRIVE PULLEY ENGAGEMENT SPEED	**MIN:** 3700 **MAX:** 4000
102. C.S. DU BOULON DE LA POULIE MOTRICE: DRIVE PULLEY BOLT TORQUE	79 - 90 N.m (58-66 ft-lbs)
103. C.S. DES ÉCROUS DE LA CHEVILLE À ÉPAULEMENT: SHOULDERED PIN NUT TORQUE	15 - 17 N.m (11-12 ft-lbs) (132-150 in-lbs)

104.	TYPE DE POULIE MENÉE: DRIVEN PULLEY TYPE	With exterior cam (Die Cast with 2 bushings)
105.	POIDS DE POULIE MENÉE: WEIGHT OF DRIVEN PULLEY	3.64 kg (8 lbs)
106.	TENSION DU RESSORT (poulie menée) SPRING PRE-LOAD (driven pulley)	5.9 kg $^{+0.9}_{-0.0}$ (13 lbs $^{+2}_{-0}$)
107.	ÉCART ENTRE LES POULIES: DISTANCE BETWEEN PULLEYS	269.87 mm $^{+3.17}_{-0.0}$ (10.625" $^{+.125}_{-0}$)
108.	DÉCALAGE (dimensions X et Y): OFFSET (dimensions X & Y)	"X" = 34.53mm ± .38 (1.359"±.015 (dimension "X" must not exceed "Y" = 35.30 ± .76 (1.390" ± .030)
109.	NO. DE COURROIE D'ENTRAÎNEMENT: DRIVE BELT NO.	414 5233 00
110.	LARGEUR: (neuve) (minimum acceptable) WIDTH (new) 34.92mm(1.375") 31.74mm(1.250")	
111.	PAS DE CHAÎNE: (type) CHAIN PITCH 9.525mm(3/8") Triple rollers (Brampton)	
112.	NOMBRE DE MAILLONS: NO. OF LINKS	66 rollers
113.	RAPPORT D'ENGRENAGE DU CARTER: CHAINCASE GEARING RATIO	21/34 137.6 km/h (85.5 mph)
114.	RAPPORT OPTIONNEL: OPTIONAL RATIO	--
115.	TYPE DE FREIN: BRAKE TYPE	Mechanical self-adjusting
116.	RÉGLAGE DU FREIN: BRAKE ADJUSTMENT	Auto-adjustable
117.	ÉPAISSEUR MINIMUM DES GARNITURES: MINIMUM LINING THICKNESS	Pads are serviceable when the fixed lining protrudes 1mm from the caliper.

AUTRES INFORMATIONS:
OTHER INFORMATIONS

118. N/A

119. N/A

120. N/A

121. N/A

CONTENANCE
LIQUID CAPACITIES

122. RÉSERVOIR À ESSENCE (moins 10%): GAS TANK (less 10%)	25 liters (5.5 Imp. gals - 6.6 U.S. gals)
123. RÉSERVOIR D'HUILE DE LA VALVE ROTATIVE: ROTARY VALVE OIL RESERVOIR	568 ml (16 oz.)
124. RÉSERVOIR D'HUILE À INJECTION: INJECTION OIL RESERVOIR	Nil
125. CARTER DE CHAÎNE OU BOÎTE DE VITESSES: CHAINCASE OR GEARBOX	200 ml (7 oz.)
126. SYSTÈME DE REFROIDISSEMENT: COOLING SYSTEM	4.54 liters (4 Imp. quarts - 4.8 U.S. quarts)
127. MÉLANGE ANTIGEL/EAU ANTIFREEZE "WATER MIXTURE"	55/45
128. PRESSION DU BOUCHON DU RÉSERVOIR D'EXPANSION: EXPANSION TANK CAP PRESSURE	90 kPa (13 psi)

AUTRES INFORMATIONS
OTHER INFORMATIONS

129. N/A

130. N/A

131. N/A

132. N/A

133. N/A

134. N/A

135. N/A

136. N/A

SUSPENSION

137. TYPE DE SUSPENSION: SUSPENSION TYPE	Rising rate
138. CHENILLE, MATÉRIAU ET TYPE: TRACK MATERIAL AND TYPE	Rubber and fiberglass rod
139. LARGEUR DE CHENILLE: WIDTH OF TRACK	38.1 cm (15")
140. LONGUEUR DE CHENILLE: LENGTH OF TRACK	289.5 cm (114")
141. POIDS DE CHENILLE: WEIGHT OF TRACK	16.78 kg (37 lbs)
142. TENSION DE LA CHENILLE: TRACK TENSION	3.2-6.3 mm(1/8-1/4") between slider shoes and track
143. ALIGNEMENT DE LA CHENILLE: TRACK ALIGNMENT	Centered
144. COULEUR ET NO. DES RESSORTS DE SUSPENSION: COLOR AND NO. OF SUSPENSION SPRING	See operator's manual Sect. 7.9 "Suspension Technical Data "

avant gauche front left	droit right
arrière gauche rear left	droit right

145. COURROIE DE SUSPENSION, TROU NO.: SUSPENSION STRAP, HOLE NO:	Multiple selections

AUTRES INFORMATIONS
OTHER INFORMATIONS

146. N/A

147. N/A

148. N/A

149. N/A

DIRECTION
STEERING

150. TYPE DE RESSORT:
SPRING TYPE — Coil

151. ANGLE DE BRAQUAGE:
TURNING ANGLE — 34°

152. ALIGNEMENT DES SKIS:
SKI ALIGNMENT

divergence toe-out	3.175 mm (1/8")
convergence toe-in	N/A

153. TYPE DE LISSES DE SKI:
SKI RUNNER TYPE — Carbide

154. ÉCARTEMENT DES SKIS (centre en centre):
SKI STANCE (center to center) — 98.42 cm (38.75") - adjustable

155. C.S. DU BOULON DU BRAS DE DIRECTION/ JAMBE DE SKI:
STEERING ARM/SKI LEG BOLT TORQUE — 43 N.m (32 ft-lbs)

156. C.S. BOULONS COLONNE DE DIRECTION/ GUIDON:
STEERING COLUMN/HANDLEBAR BOLT TORQUE — 26 N.m (19 ft-lbs)

AUTRES INFORMATIONS
OTHER INFORMATIONS

157. N A

158. N/A

159. N/A

160. N/A

161. N/A

162. N/A

163. N/A

164. N/A

VEHICULE
VEHICLE

165. MATÉRIAU DU CHÂSSIS:
FRAME MATERIAL — Aluminium & steel

166. MATÉRIAU DU CAPOT:
CAB MATERIAL — Fiberglass

167. LONGUEUR HORS-TOUT:
OVERALL LENGTH — 273 cm (107.5")

168. LARGEUR HORS TOUT:
OVERALL WIDTH — 110.5 cm (43.5")

169. HAUTEUR HORS TOUT:
OVERALL HEIGHT — --

170. POIDS À VIDE:
DRY WEIGHT

manuel	182 kg	électrique	
manual	400 lbs	electric	N/A

171. SURFACE PORTANTE:
BEARING AREA — --

172. PRESSION AU SOL:
GROUND PRESSURE — --

173. ANGLE DE RENVERSEMENT (réservoir d'essence plein):
TILT ANGLE (gas tank full) — N/A

gauche	droite
left	right

174. POIDS TOTAL DES COMPOSANTES EN ROTATION*:
TOTAL WEIGHT OF ALL ROTATING PARTS* — N/A

*inclure liste des composantes
*include list of components

175. NIVEAU SONORE (SAE J-192a max. dBa):
NOISE LEVEL

176. ENSEMBLE HAUTE-ALTITUDE:
HIGH-ALTITUDE KIT

Non no	X
oui yes	

inclure liste de pièces et tableau de calibration
include list of components and calibration chart

177. ACCESSOIRES:
ACCESSORIES

standard standard	Std.	optionnel optional	Opt.	sans objet not applicable	N/A

a) indicateur de vitesse:
speedometer

b) compte-tours:
tachometer Std.

c) indicateur de température:
temperature gauge Std.

d) indicateur du niveau d'essence
fuel gauge

e) indicateur du phare de route
high beam indicator

f) indicateur du niveau d'huile à injection:
injection oil level indicator

g) indicateur de charge:
charging light

h) poignée chauffante:
heat grip

i) ampoule quartz-halogen:
quartz halogen bulb

j) amortisseur de ski:
ski shock absorber Std.

k) pare-brise surélevé:
high windshield

l) ampèremètre:
ampmeter

m) voltmètre:
voltmeter

n) compteur-horaire:
hourmeter

o) garde-neige
snow guard

AUTRES INFORMATIONS
OTHER INFORMATIONS

178. N/A

179. N/A

180. N/A

181. N/A

182. N/A

183. N/A

184. N/A

185. N/A