EVEREST®

1983 OPERATOR'S MANUAL

414 4946 00

model _____

V.I.N. _____

purchase date _____

warranty expiry date _____

To be completed by dealer at time of sale.

DEALER IMPRINT AREA

TECHNICAL PUBLICATIONS
AFTER SALES SERVICE DEPARTMENT
BOMBARDIER INC.
VALCOURT, QUEBEC
CANADA, J0E 2L0

The following are trademarks of Bombardier Inc.

BOMBARDIER	EVEREST	MOTO-SKI
SKI-DOO	CITATION	FUTURA
ALPINE	OLYMPIQUE	SPIRIT
BLIZZARD	T'NT	NUVIK
CARRY-BOOSE	NORDIK	MIRAGE
ELAN	SKANDIC	SUPER SONIC
ELITE		ULTRA SONIC
GRAND PRIX SPECIAL		SONIC

FOREWORD

The Operator Manual and the Snowmobile Safety handbook have been prepared to acquaint the owner / operator of a new snowmobile with the various vehicle controls maintenance and safe operating instructions. Each is indispensable for the proper use of the product, and should be kept with the vehicle at all times.

Should you have any questions pertaining to the warranty and its application, please consult the "Often Asked Question" section of this manual, or your selling dealer.

This manual uses the following symbols.

◆ **WARNING: Identifies an instruction which, if not followed, could cause personal injury.**

▼ **CAUTION: Denotes an instruction which, if not followed, could severely damage vehicle components.**

○ **NOTE:** Indicates supplementary information needed to fully complete an instruction.

Although the mere reading of such information does not eliminate the hazard, your understanding of the information will promote its correct use.

SAFETY IN MAINTENANCE

Observe the following precautions:

- Throttle mechanism should be checked for free movement before starting engine.
- The snowmobile engine can be stopped by activating the emergency cut-out or tether switches or turning off the key.
- Clean and check operation of the headlight, tail light and brake light.
- Engine should be running only when pulley guard is secured in place.
- Never run the engine without drive belt installed. Running an unloaded engine can prove to be dangerous.
- Never run the engine when the track is raised off the ground.
- It can be dangerous to run engine with the hood removed.
- Gasoline is flammable and explosive under certain conditions. Always manipulate in a well ventilated area. Do not smoke or allow open flames or sparks in the vicinity. If gasoline fumes are noticed while driving, the cause should be determined and corrected without delay.
- Maintain your vehicle in top mechanical condition at all times.
- Your snowmobile is not designed to be driven or operated on black top, bare earth, or other abrasive surfaces. On such surfaces abnormal and excessive wear of critical parts is inevitable.
- Your snowmobile is not designed to be operated on public streets, road or highways. In most States and Provinces, it is considered an illegal operation.
- Installation of other than standard equipment, including ski-spreaders, bumpers, pack racks, etc., could severely affect the stability and safety of your vehicle. Avoid adding on accessories that alter the basic vehicle configuration.
- Whenever the vehicle is parked outdoors, overnight or for a long period, it is suggested to protect it against the inclemency of the weather with a snowmobile cover.
- Do not lubricate throttle and/or brake cables and housings.
- Only perform procedures as detailed in this manual. Unless otherwise specified, engine should be turned OFF for all lubrication and maintenance procedures.

- PLEASE READ AND UNDERSTAND ALL WARNINGS AND CAUTIONS IN THIS MANUAL AND ON THE VEHICLE.

◆ **WARNING: Should removal of a nylon lock nut be required when undergoing repairs/disassembly, always replace by new ones. Tighten as specified in the applicable Shop Manual.**

THIS MANUAL SHOULD REMAIN WITH THE VEHICLE AT THE TIME OF RESALE.

INDEX

THE 1983 "LIMITED WARRANTY 4

OFTEN ASKED QUESTION 6

LISTING OF AREA DISTRIBUTORS 8

HOW TO IDENTIFY YOUR SNOWMOBILE 9

CONTROLS/INSTRUMENTS
Throttle lever, brake lever, ignition switch, light switch, high beam indicator, emergency cut-out switch, headlamp dimmer switch, rewind starter handle, primer, tachometer, speedometer, temperature gauge, tether cut-out switch, oil level indicator, mirror, fuel gauge, fuel tank cap, hood opening, adjustable steering handle, tool box, fuses 10

BREAK-IN PERIOD
Break-in, inspection, inspection check list 14

FUEL MIXING
Recommended gasoline, recommended injection oil 16

PRE-START CHECK
Check points 16

STARTING PROCEDURE
Electric starting, manual starting, emergency starting, before riding 17

LUBRICATION
Frequency, steering mechanism, chaincase oil level, rotary valve system, oil injection system, drive axle, slide suspension 18

MAINTENANCE
Chart, belt guard removal, drive belt removal, drive belt condition, new drive belt, brake condition, brake adjustment, spark plugs, battery, suspension condition, suspension adjustment, track condition, track tension and alignment, drive pulley, steering mechanism, steering adjustment, muffler attachment, engine head nuts, engine mount nuts, carburetor adjustment, air silencer, oil injection pump adjustment, cooling system, fan belt, headlamp beam aiming, bulb replacement, general inspection 20

STORAGE
Cooling system, track, suspension, skis, controls, chaincase, fuel tank, carburetor, engine & primer lubrication, drive pulley, chassis, battery, general inspection 30

PRE-SEASON PREPARATION
Pre-season preparation chart 34

TROUBLE SHOOTING GUIDE 35

TOOLS 37

SPECIFICATIONS 38

WIRING DIAGRAM 40

SI METRIC INFORMATION GUIDE 43

CHANGE OF ADDRESS OR OWNERSHIP 47

THE 1983 "LIMITED WARRANTY"

1 - PERIOD

BOMBARDIER® INC. as manufacturer, warrants FROM THE DATE OF FIRST CONSUMER SALES, every 1983 SKI-DOO® / MOTO-SKI® snowmobile, sold as NEW AND UNUSED, by an authorized SKI-DOO or MOTO-SKI dealer respectively, for a period of:

- 12 consecutive months.

2 - WHAT BOMBARDIER WILL DO

BOMBARDIER will repair and/or replace, at its option, components defective in material and/or workmanship (under normal use and service,) with a genuine BOMBARDIER component without charge for parts or labour, at any authorized SKI-DOO or MOTO-SKI dealer during said warranty period.

3 - CONDITION TO HAVE WARRANTY WORK PERFORMED

Present to the servicing dealer, the hard copy of the BOMBARDIER Customer Registration card received by the customer from the selling dealer at time of purchase.

4 - WARRANTY TRANSFER

This warranty is transferable to subsequent owner(s) for remainder of warranty period from original date of sale.

5 - EXCLUSIONS - ARE NOT WARRANTED

- Normal wear on all items such as, but not limited to:
  - drive belts
  - slider shoes
  - spark plugs
  - bulbs
  - runners on skis
- Replacement parts and/or accessories which are not genuine BOMBARDIER parts and/or accessories.
- Damage resulting from installation of parts other than genuine BOMBARDIER parts.
- Damage caused by failure to provide proper maintenance as detailed in the Operator Manual. The labour, parts and lubricants costs of all maintenance services, including tune-ups and adjustments will be charged to the owner.
- Wet cells battery.
- Vehicles designed and/or used for racing purposes.
- All optional accessories installed on the vehicle.
  (The normal warranty policy for parts and accessories, if any, applies).
- Damage resulting from accident, fire or other casualty, misuse, abuse or neglect.
- Damage resulting from operation of the snowmobile on surfaces other than snow.

- Damage resulting from modification to the snowmobile not approved in writing by BOMBARDIER.
- Losses incurred by the snowmobile owner other than parts and labour, such as, but not limited to, transportation, towing, telephone calls, taxis, or any other incidental or consequential damages.

6 - BATTERY WARRANTY:

- 12 consecutive months. (Pro-rated.)

  100% warranty coverage will start on the date the snowmobile was purchased and run to the following April 30th. The remainder of the 12 months period will be pro-rated as follows:
  — 50% from April 30th to December 1st.
  — 40% from December 1st to December 31st.
  — 30% from January 1st to end of warranty.

Some states or provinces do not allow the exclusion or limitation of incidental or consequential damages, so the above limitation or exclusion may not apply.

7 - EXPRESSED OR IMPLIED WARRANTIES

This warranty gives you specific rights, and you may also have other legal rights which may vary from state to state, or province to province. Where applicable this warranty is expressly in lieu of all other expressed or implied warranties of BOMBARDIER, its distributors and the selling dealer, including any warranty of merchantability of fitness for any particular purpose; otherwise the implied warranty is limited to the duration of this warranty. However, some states or provinces do not allow limitations on how long an implied warranty lasts, so the above limitation may not apply.

Neither the distributor, the selling dealer, nor any other person has been authorized to make any affirmation, representation or warranty other than those contained in this warranty, and if made, such affirmation, representation or warranty shall not be enforceable against BOMBARDIER or any other person.

BOMBARDIER INC. reserves the right to modify its warranty policy at any time, being understood that such modification will not alter the warranty conditions applicable to vehicles sold while the above warranty is in effect.

8 - CONSUMER ASSISTANCE

If a servicing problem or other difficulty occurs, we suggest the following:

1. Try to resolve the problem at the dealership with the Service Manager or Owner.
2. If this fails, contact your area distributor listed in the Operator Manual.
3. Then if your grievance still remains unsolved, you may write to us:

Bombardier Inc.
Service Department
Recreational Products Division
Valcourt, Quebec, Canada, JOE 2LO

April 1982
Bombardier Inc.
Valcourt, Quebec, Canada, JOE 2LO

* *Trademarks of Bombardier Inc.

OFTEN ASKED QUESTIONS

Q: Why must my snowmobile be registered? After all I do have my original invoice as proof of when I purchased my snowmobile.

A: Your warranty is valid at any authorized dealer of the product. Your registration is the key element in providing the servicing dealer with the necessary data to complete warranty claim forms. This information is also used to notify owners in the event of a safety recall.

Q: I bought my snowmobile in O'King County but I snowmobile in Washington County. Can the dealer in Washington County accept to perform warranty work on my snowmobile?

A: Yes, any authorized dealer in North America can perform warranty repairs, providing the customer warranty registration card is presented.

Q: Where can I find information on the lubrication and maintenance of my snowmobile?

A: In this Operator Manual provided with the vehicle at the time of first sale.

Q: Will the entire warranty be void or cancelled, if I do not operate or maintain my new snowmobile exactly as specified in the Operator's Manual?

A: The warranty of the new snowmobile cannot be "Voided" or "Cancelled". However, if a particular failure is caused by operation or maintenance other than is shown in the Operator Manual, THAT failure may not be covered under warranty. This includes service work performed by the customer, especially the critical adjustments to ignition, timing, carburation and oil injection/or oil mixture.

Q: Would you give some examples of abnormal use or strain, neglect or abuse?

A: These terms are general and overlap each other in areas. Some specific examples may include: running the machine out of oil, chain failure caused by a lack of lubrication, operating the machine with a broken or damaged part which causes another part to fail, and so on. If you have any specific questions on operation or maintenance, please contact your dealer for advice.

Q: What costs are my responsibility during the warranty period?

A: The customer's responsibility includes all costs of normal maintenance services, non-warranty repairs, accidents and collision damage, as well as oils, and spark plugs, and incidental or consequential damages costs as explained in the warranty.

Q: Are "Genuine" Bombardier replacement parts used in warranty repairs covered by warranty?

A: Yes. When installed by an authorized dealer, any "genuine" Bombardier part used in warranty repairs assumes the remaining warranty that exists on the machine.

Q: If I sell my snowmobile within the warranty period, will the new owner qualify for the balance of the warranty?

A: Yes, provided the unit has already been registered with the manufacturer. Note that the change of ownership card in this manual should be completed and sent to Bombardier Inc.

Q: How can I receive the best owner assistance?

A: The satisfaction and goodwill of the owners of Bombardier products are of primary concern to your dealer and Bombardier Inc. Normally, any problems that arise in connection with the sales transaction or the operation of your snowmobile will be handled by your Dealers Sales or Service Departments. It is recognized, however, that despite the best intentions of everyone concerned, misunderstandings will sometimes occur. If you have a problem that has not been handled to your satisfaction through normal channels, we suggest that you discuss your problem with a member of dealership management. Frequently, complaints are the result of a breakdown in communications and can quickly be resolved by a member of the dealership management. If the problem already has been reviewed with the Sales Manager or Service Manager, contact the Dealer himself or the General Manager.

LISTING OF AREA DISTRIBUTORS

CANADIAN DISTRIBUTORS

Ski-Doo & Moto-Ski

BROOKS EQUIPMENT LIMITED
1616 King, Edward Street
P.O. Box 985
Winnipeg, Manitoba, R3C 2V8
(204) 633-7247
British Columbia

BOMBARDIER INC.
EASTERN CANADA DISTRIBUTION DIVISION
Atlantic Branch
P.O. Box 670
Shediac, New Brunswick, E0A 3G0
(506) 386-6117
Magdalen Island, Nova Scotia, New Brunswick, Prince Edward Island

BOMBARDIER INC.
EASTERN CANADA DISTRIBUTION DIVISION
(Quebec Branch)
1350 Nobel Boulevard
Boucherville, Quebec, J4B 1A1
(514) 527-2469 or 655-6121
Province of Quebec

BOMBARDIER INC.
EASTERN CANADA DISTRIBUTION DIVISION
Ontario Branch
230 Bayview Drive
Barrie, Ontario, L4N 4Y8
(705) 728-8600
Province of Ontario

TRACT EQUIPMENT
14325 - 114th Avenue
Edmonton, Alberta, T5M 2Y8
(403) 452-9910
Alberta, District of Mackenzie N.W.T, Yukon

Ski-Doo only

BROOKS EQUIPMENT LIMITED
1616 King, Edward Street
P.O. Box 985
Winnipeg, Manitoba, R3C 2V8
(204) 633-7247
Manitoba, Sackatchewan

HUDSON'S BAY CO. LTD.
165 Hymus Blvd
Pointe-Claire, Québec, H9R 1G2
(514) 697-8500
North-West Territories, Franklin District & Keewatin

J.W. Randall Limited
Weat Street
P.O. Box 1050
Corner Brook, Newfoundland, A2H 6G7
(709) 634-3533
Newfoundland, Labrador

Moto-Ski only

CONSOLIDATED TURF (1965) EQUIP. LTD
972 Powell Avenue
Winnipeg, Manitoba, R3H 0H6
(204) 633-7276
Manitoba, Saskatchewan and a few countries in Ontario

EQUIPEMENTS ARNAUD LIMITEE
469 Arnaud Avenue
Sept-Îles, Quebec, G4R 3B3
(418) 962-5545
Labrador City, Wabush, Sept-Îles

CHARLES R. BELL LIMITED
P.O. Box 8127
81 Kenmount Road
St-John's, Newfoundland, A1B 3N1
(709) 722-6700
Newfoundland and territory of Labrador (excluding Labrador City and Wabush)

AMERICAN DISTRIBUTORS

Ski-Doo & Moto-Ski

BOMBARDIER CORPORATION
All States (excluding Alaska)

FIELD OFFICES
- East Main Street Road
  Malone, New York 12953
  (518) 483-4411

- 4505 West Superior Street
  P.O. Box 6106
  Duluth, Minnesota 55806
  (218) 628-2881

- P.O. Box 1569
  Idaho Falls, Idaho, 83401
  (208) 529-9510

MILLER EQUIPMENT AND RECREATIONAL CENTER
1049 Whitney Road
Anchorage, Alaska 99501
(907) 274-9513
Alaska

HOW TO IDENTIFY YOUR SNOWMOBILE

The main components of your snowmobile (engine, track and frame) are identified by different serial numbers. It may sometimes become necessary to locate these numbers for warranty purposes or to trace your snowmobile in the event of theft.

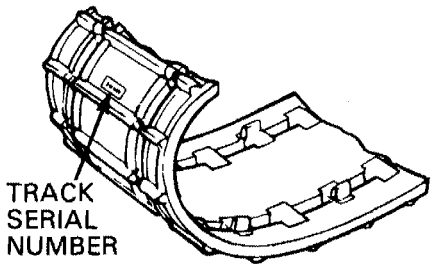

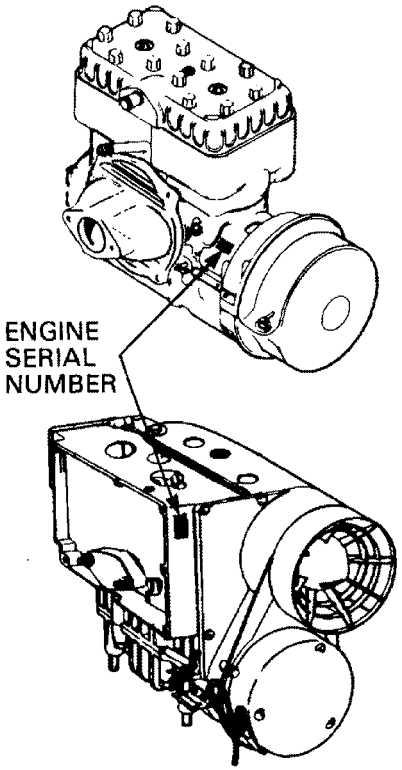

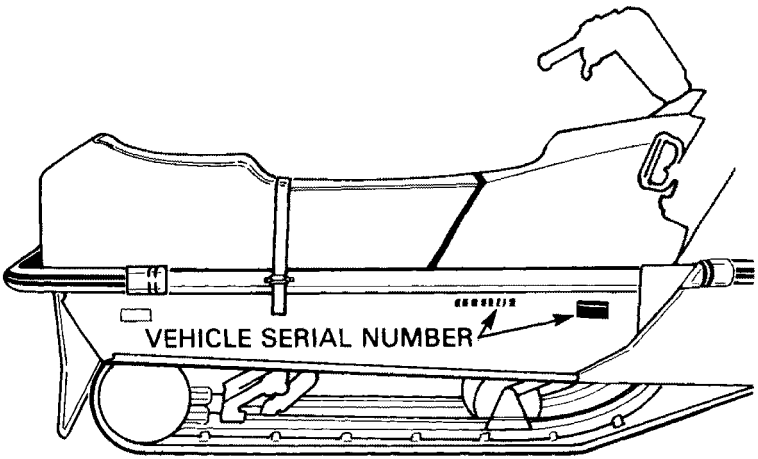

NOTE: We strongly recommend that you take note of all the serial numbers on your vehicle and supply them to your insurance company. It will surely help in the event a snowmobile is stolen.

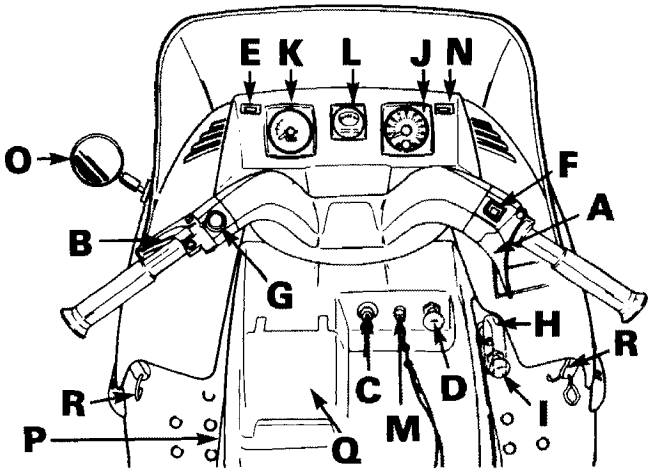

A) Throttle Lever
B) Brake Lever
C) Ignition Switch
D) Light Switch (electric models)
E) High Beam Indicator
F) Emergency Cut-Out Switch
G) Headlamp Dimmer Switch
H) Rewind Starter Handle
I) Primer
J) Tachometer (L/C models)
K) Speedometer
L) Temperature Gauge (L/C models)
M) Tether Cut-Out Switch
N) Injection oil level indicator
O) Mirror (L/C models)
P) Fuel gauge
Q) Fuel tank cap
R) Hood opening

A) Throttle Lever

Located on right side of handlebar. When compressed, it controls the engine speed and the engagement of the transmission. When released, engine speed returns automatically to idle.

B) Brake Control Lever

Located on the left side of handlebar. When compressed, the brake is applied. When released, it automatically returns to its original position. Braking effect is proportionate to the pressure applied on the lever.

NOTE: On electric start models only, compressing the brake lever will light up the injection oil level indicator bulb. If bulb does not light up, replace with a new one.

C) Ignition/Light Switch

Manual Start Models

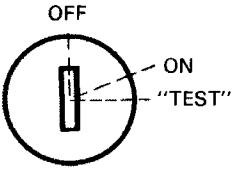

Key operated, 3 position switch. To start engine, first turn key clockwise to ON position. To stop engine, turn key counter-clockwise to OFF position.

The lights are automatically ON whenever the engine is running.

To test oil level indicator bulb, with engine running, turn key to test position. If bulb does not lite, replace.

Electric Start Models

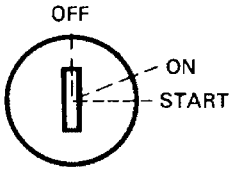

Key operated, 3 position switch. To start engine, turn key fully clockwise to START position and hold. Return key to ON position immediately when engine has started. To stop engine, turn key counter-clockwise to OFF position.

CAUTION: Holding key in start position when engine has started will damage starter mechanism.

D) Light Switch (Electric Start Models)

A push pull switch type, to illuminate headlamp and taillight, pull switch knob. (Ignition switch must be turned to ON position).

E) High Beam Indicator

Lights up when headlamp is on high beam.

F) Emergency Cut-Out Switch

A push pull type switch located on the right side of the handlebar. To stop the engine in an emergency, push the button to the lower off position. To start engine, button must be at the upper on position.

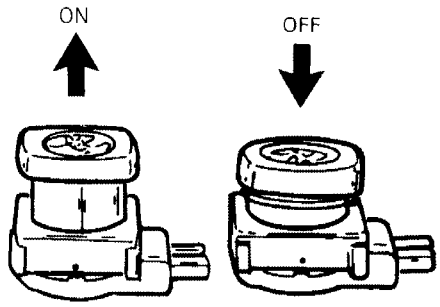

Upper position before starting engine

Lower position to stop engine

The driver of this vehicle should familiarize himself with the function of this device by using it several times on first outing. Thereby being mentally prepared for emergency situations requiring its use.

WARNING: If the switch has been used in an emergency situation the source of malfunction should be determined and corrected before restarting engine.

G) Headlamp Dimmer Switch

The dimmer switch, located on left side of handlebar, allows correct selection of headlamp beam. To obtain high or low beam simply flick the switch.

H) Rewind Starter Handle

Auto rewind type located on right hand side of vehicle. To engage mechanism, pull handle.

I) Primer

A push-pull button located alongside manual starter handle. Pull and push button (2-3 times) to activate primer. The primer should always be used for cold engine starts. After engine is warm however, it is not necessary to use primer when starting.

J) Tachometer (L/C models)

The tachometer registers the impulses of magneto. Direct-reading dial indicates the number of revolutions per minute (RPM) of the engine.

CAUTION: The tachometer is protected by a fuse, if tachometer stops operating check fuse condition and if necessary replace. The fuse is 0.1 amp. Do not use a higher rated fuse as this can cause severe damage to the tachometer.

K) Speedometer

The speedometer is linked directly to the drive axle. Direct-reading dial indicates the speed of the vehicle. Odometer records the total distance travelled in kilometers.

L) Temperature Gauge (L/C models)

The gauge indicates engine coolant temperature. Normal operating temperature is 50°C (120°F). However, coolant temperature can vary depending on driving condition. If coolant temperature exceeds 95°C (200°F) reduce speed and run vehicle in loose snow or stop engine immediately.

◆ **WARNING: To remove coolant tank cap, place a cloth over the cap and unscrew it to the first step to release the pressure. If this notice is disregarded loss of fluid and possible severe burns could occur.**

M) Tether Cut-Out Switch

A pull switch located below the handlebar. Attach tether cord to wrist or other convenient location then snap tether cut-out cap over receptacle before starting engine.

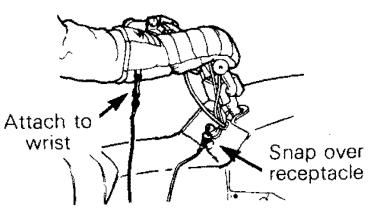

If emergency engine "shut off" is required completely pull cap from safety switch and engine power will be automatically shut "off".

○ NOTE: The cap must be installed on the safety switch at all times in order to operate the vehicle.

◆ **WARNING: If the switch is used in an emergency situation the source of malfuntion should be determined and corrected before restarting engine.**

N) Oil Level Indicator

Will light up when injection oil level is low. Check level and replenish as soon as possible.

▼ **CAUTION: Do not run engine out of oil. Serious engine damage will occur.**

To test oil level indicator bulb: on manual start models, turn ignition key (engine running) to "test" position. On electric start models, indicator light will glow each time brake lever is used. If light does not glow, replace bulb.

O) Mirror

Adjust the mirror so you can just see the rear side of your seat in the inboard portion of the mirror.

◆ **WARNING: This mirror is of the convex type (identified by its curved surface) to provide wider vision. Note that the vehicles or objects seen in such a mirror will appear smaller and farther away than they really are.**

P) Fuel Gauge

The fuel gauge is located on the left side of the fuel tank. The gauge function on the principle of communicating vessels, so the fuel level inside the tank is directly related with the level indicated on the gauge.

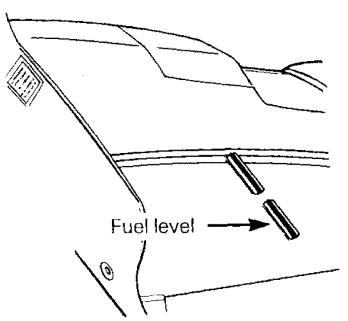

◆ **WARNING: Never use a lite match or open flame to check fuel level.**

Q) Fuel Tank Cap

Accessible under fuel tank cover. Lift cover, unscrew cap. Plastic retainer will stop cap from falling.

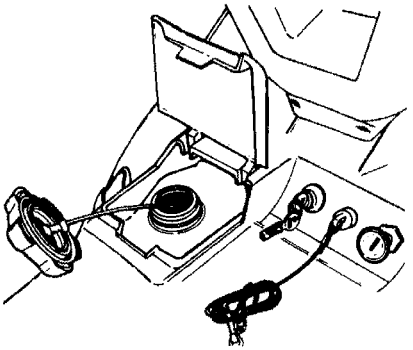

R) Hood Opening

Pull down the latch to unhook the hood from the anchor.

NOTE: Always lift hood gently up until stopped by restraining device.

WARNING: It is dangerous to run an engine with the hood open or removed. Personal injury could result.

CAUTION: Prior to re-securing the hood latch, position the bottom edge of the hood into the hood guide located on each side of the frame.

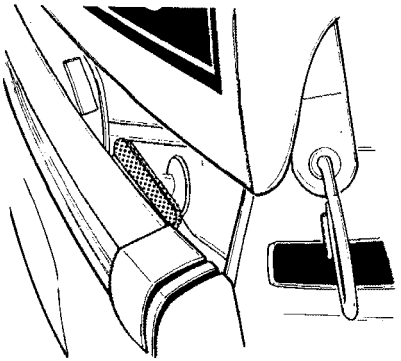

Adjustable steering handle

- Remove steering pad.
- Loosen the four (4) retaining screws.
- Adjust the handle to the desired position.

WARNING: Do not adjust too high as the brake lever may contact the windshield when turning.

- Lock the steering handle in place by tightening the four (4) retaining screws to 26 N•m (19 ft-lbs).
- Reinstall steering pad.

Tool Box

Located under the hood. To gain access, tilt hood. Ideal location for spare plugs, rope, first aid kit, flashlight, etc.

Fuses (Electric Start Models)

Starting system is protected with a 30 amperes rated fuse. Fuse holder is located near the battery. If engine does not start, check fuse condition and if necessary replace.

Instruments are protected with a 15 amperes rated fuse. Fuse holder is located under the hood near the ignition switch. If instruments stop operating, check fuse condition and if necessary replace.

BREAK-IN PERIOD

With Bombardier-Rotax snowmobile engines, a break-in period is required before running the vehicle at full throttle. Engine's manufacturer recommendation is 10 to 15 operating hours. During this period, maximum throttle should not exceed 3/4, however, brief full acceleration and speed variations contribute to a good break-in. Continued wide open throttle accelerations, prolonged cruising speeds, and lugging are detrimental during the break-in period.

NOTE: For the break-in period only, 1 (16 oz) can of Bombardier 50/1 engine oil should be added to the first full fuel tank filling, at a 70/1 ratio. This will assure additionnal protection during the initial engine break-in.

CAUTION: Remove and clean spark plugs after engine break-in.

NOTE: A new drive belt requires a break-in period of 15-25 km (10-15 miles).

10-Hour Inspection

As with any precision piece of mechanical equipement, we suggest that after the first 10 hours of operation or 30 days after the purchase, whichever comes first, your vehicle be checked by your dealer. This inspection will give you the opportunity to discuss the unanswered questions you may have encountered during the first hours of operation. Remember that it is easier to remedy at this time than to allow the snowmobile to operate until a possible failure occurs.

The 10 hours inspection is at the expense of the vehicle owner.

10-HOUR INSPECTION CHECK LIST	✓
Engine timing	
Spark plug(s) condition: Remove and clean	
Carburetor adjustment	
Engine head nuts	
Engine mount nuts	
Muffler attachment	
Chaincase, rotary valve (L/C models) and injection oil level	
Coolant level (L/C models)	
Fan belt tension (F/C models)	
Battery electrolyte level (Electric start models)	
Brake operation and lining condition	
Skis alignment (runner condition)	
Pulley alignment and drive belt condition	
Oil injection pump adjustment	
Track condition, tension and alignment	
Lubrication (steering, suspension)	
Electrical wiring (loose connections, stripped wires, damaged insulation), tighten all loose bolts, nuts and linkage	
Operation of lighting system (HI / LO beam, brake light, etc.), test operation of emergency cut-out switch and tether cut-out switch	

We recommend that you have your dealer sign this inspection .

Date of 10 hour inspection

Dealer signature

Recommended Gasoline

Use regular leaded or unleaded gasoline available from all service stations.

CAUTION: Never experiment with different fuel or fuel ratios. Never use naphtha, methanol, gasohol or similar products.

NOTE: For the break-in period only, 1 (16 oz) can of Bombardier snowmobile oil should be added to the FIRST FULL FUEL tank filling, at a 70/1 ratio. This will assure additional protection during the initial engine break-in.

WARNING: Never "top up" the gas tank before placing the vehicle in a warm area. At certain temperatures, gasoline will expand and overflow.

Recommended Injection Oil

Use concentrated Bombardier snowmobile oil available from your dealer.

Check Points

- ACTIVATE THE THROTTLE CONTROL LEVER SEVERAL TIMES to check that it operates easily and smoothly. The throttle control lever must return to idle position when released.
- Check that the skis and the track are not frozen to the ground or snow surface and that steering operates freely.
- Activate the brake control lever and make sure the brake fully applies before the brake control lever touches the handlebar grip.
- Liquid cooled models: Check coolant level. Liquid should be 19-25 mm (3/4-1 in.) below filler neck. If additional coolant is necessary, always use a 50/50 (50 parts of water for 50 parts of anti-freeze) solution. When entire system has to be refilled use a solution of 3 parts of anti-freeze for 2 parts of water. See cooling system in storage.

WARNING: Before removing the radiator pressure cap place a cloth over the coolant tank and release the pressure. Loss of fluid and possibility of severe burns could occur, if this notice is disregarded.

- Check fuel level.
- Check injection oil level.
- Verify that the path ahead of the vehicle is clear of bystanders and obstacles.

WARNING: Only start your snowmobile once all components are checked and functioning properly.

Test throttle control lever.

Check that the emergency cut-out switch is in the ON position.

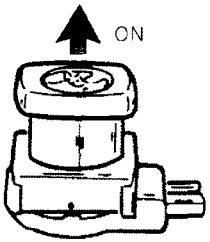

Upper position before starting engine

Ensure the tether cut-out cap is in position and that the cord is attached to your clothing.

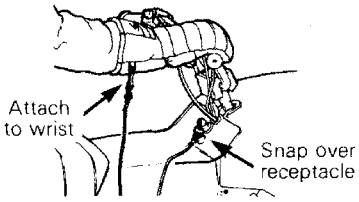

Activate the primer (2 or 3 times).

NOTE: Primer is not necessary when the engine is warm.

Electric Starting

Insert key in ignition switch.

Turn ignition key clockwise until starter engages. Release key immediately when engine has started. If engine does not start on first try, key must be turned fully back to OFF each time.

WARNING: Do not apply throttle while starting.

CAUTION: On liquid cooled models, since engine cooling is in effect only when the vehicle is in motion, it is recommended that you do not allow the engine to idle for more than brief periods. Prolonged idling may cause engine damage.

NOTE: If for some reason the vehicle cannot be started electrically, place ignition key to ON position and start engine manually.

Manual Starting

Insert the key in the ignition and turn to ON position.

Grasp manual starter handle firmly and pull slowly until a resistance is felt then pull vigorously. Slowly release the rewind starter handle.

WARNING: Do not apply throttle while starting.

Should the rewind starter rope fray and break, the engine can be started with an emergency starter rope.

Emergency Starting

WARNING: Do not start the vehicle by the drive pulley unless it is a true emergency situation, have the vehicle repaired as soon as possible.

Attach emergency rope to starter grip. Remove the belt guard from the vehicle and wind the emergency rope tight around the drive pulley between the sliding half and the roller guard. Start the engine as per usual manual starting.

WARNING: When starting the vehicle in an emergency situation by the drive pulley, do not make a knot at the end of the emergency rope and do not reinstall the belt guard.

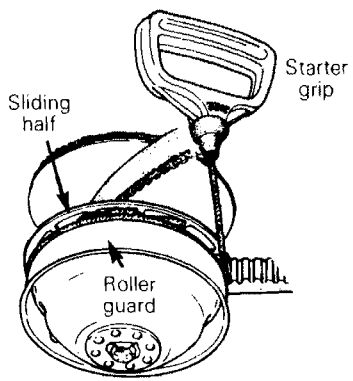

Before riding

Check operation of the emergency cut-out switch, and tether switch. Restart engine.

◆ **WARNING: If engine does not shut-off when applying the emergency cut-out switch and or when pulling the tether cut-out cap, stop the engine by turning off the ignition key. Do not operate the vehicle further, see your dealer.**

Allow the engine to warm before operating at full throttle.

Frequency

Routine maintenance is necessary for all mechanized products, and the snowmobile is no exception. A weekly vehicle inspection contributes to the life span of the snowmobile as well as retains safe and dependable operation. It is recommended that the steering system and suspension be lubricated monthly or every 40 hours of operation. If the vehicle is operated in wet snow or in severe conditions these items should be lubricated more frequently.

◆ **WARNING: Only perform such procedures as detailed in this manual. It is recommended that dealer assistance be periodically obtained on other components/systems not covered in this manual. Unless otherwise specified, engine should be turned OFF for all lubrication and maintenance procedures.**

Steering Mechanism

◆ **WARNING: Do not lubricate throttle and/or brake cable and housings, and spring coupler bolts.**

Lubricate the ski legs at grease fittings until new grease appears at joints. Lubricate tie rod end ball joints.

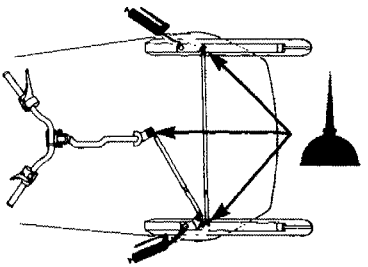

Chaincase Oil Level

Check the oil level by removing the oil level cap plug.

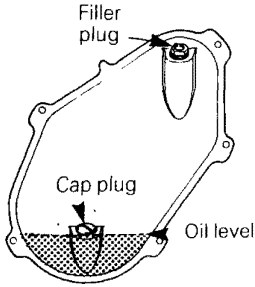

The oil should be level with the bottom of the oil level orifice.

NOTE: The chaincase oil capacity is approximately 200 mL (7 oz.).

Rotary Valve System (L/C models)

Check reservoir oil level frequently. Level should not be below level line of plastic reservoir. If necessary replenish to oil level line using Bombardier snowmobile oil available from your dealer.

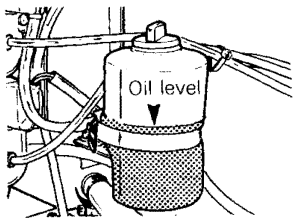

Oil Injection System

Check reservoir frequently. Replenish as required, using Bombardier snowmobile oil, available from your dealer.

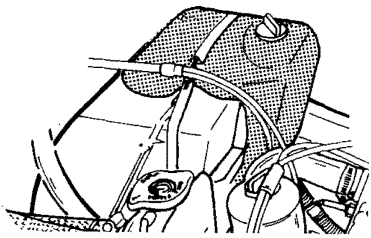

Drive Axle

Lubricate at grease fitting using low temperature grease.

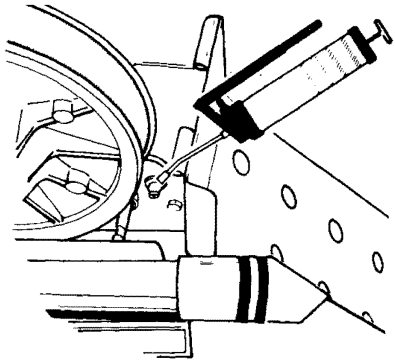

CAUTION: When lubricating the drive axle bearing, do not apply excessive grease as the seal will be pushed out of its housing. Check seal position with finger.

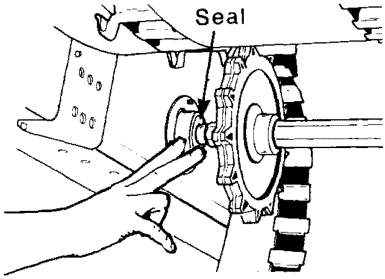

Slide Suspension

Grease idler wheels at grease fittings.

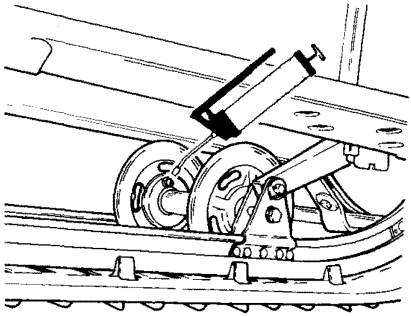

The following Maintenance Chart indicates regular servicing schedules to be performed by you or your servicing dealer. If these services are performed as suggested, your snowmobile will give you many years of low-cost use.

◆ WARNING: Only perform such procedures as detailed in this manual. It is recommended that dealer assistance be periodically obtained on other components/systems not covered in this manual. Unless otherwise specified, engine should be turned OFF for all lubrication and maintenance procedures.

SERVICE AND MAINTENANCE CHART	Weekly or every 240 km (150 m)	Monthly or every 800 km (500 m)	Once a year or every 3200 km (2000 m)	Refer to page
Drive belt	●			21
Brake condition	●			22
Brake adjustment		●		22
Spark plugs		●		22
Battery (electric start models)	●			23
Suspension condition		●		23
Suspension adjustment	(as required)			23
Track condition		●		24
Track tension and alignment		●		24
Drive pulley		●		25
Steering mechanism		●		25
Steering adjustment		●		26
Muffler attachment		●		26
Engine head nuts			●	27
Engine mount nuts			●	27
Carburetor adjustment			●	27
Oil injection pump adjustment			●	28
Cooling system (L/C models)			●	28
Fan belt (F/C models)			●	28
Headlamp beam aiming			●	28
General inspection		●		29

NOTE: The ten hour inspection is a very important part of proper service and maintenance.

DRIVE BELT AND GUARD REMOVAL

Belt Guard Removal

◆ **WARNING: Engine should be running only when belt guard is secured in place.**

1. Tilt the hood, remove both belt guard retaining clips (A).
2. Pull out both retaining pins (B).

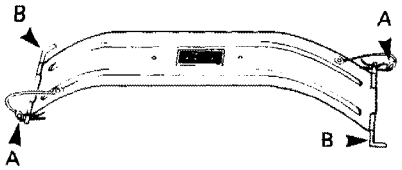

◆ **WARNING: At the removal or installation of the belt guard front retaining pin be careful not to burn yourself on the exhaust system.**

3. Lift and remove the belt guard assembly.

Drive Belt Removal

◆ **WARNING: Never start or run engine without the drive belt installed. Running an unloaded engine is dangerous.**

1. Tilt the hood and remove the belt guard.
2. Open the driven pulley by twisting and pushing the sliding half. Hold in fully open position.

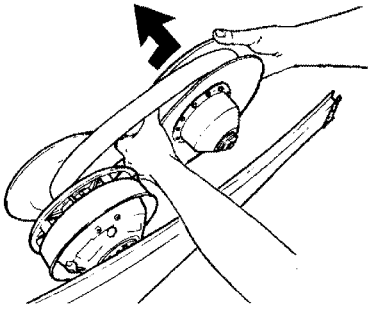

3. Slip the belt over the top edge of the sliding half.

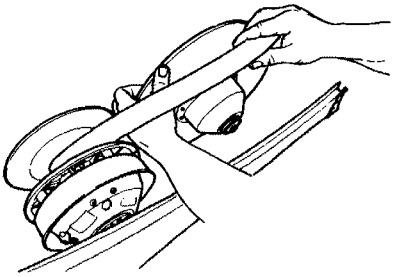

4. Slip the belt out from the drive pulley and remove completely from the vehicle. To install the drive belt, reverse the procedure.

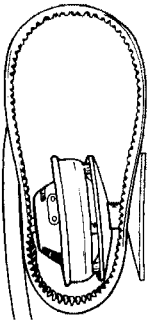

Drive Belt Condition

Inspect belt for cracks, fraying or abnormal wear (uneven wear, wear on one side, missing cogs, cracked fabric). If abnormal wear is noted, probable cause could be pulley misalignment, excessive R.P.M. with frozen track, fast starts without warm-up period, burred or rusty sheave, oil on belt or distorted spare belt. Contact your dealer.

Check the drive belt width. If less than 30 mm (1 3/16 in), replace the drive belt.

New Drive Belt

When installing a new drive belt, break-in period of 25 km (15 miles) is strongly recommended.

NOTE: Always store a spare belt in a manner to allow its natural shape to be maintained.

Brake Condition

The brake mechanism on your snowmobile is an essential safety device. Keep this mechanism in proper working condition. Above all, do not operate your snowmobile without an effective brake system.

WARNING: Brake pad or pucks less than 3 mm (1/8") thick must be replaced. Replacement must be performed by an authorized dealer.

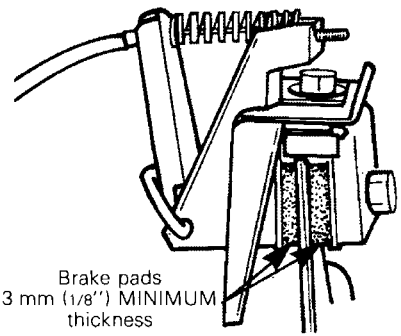

Brake Adjustment

Brake should apply fully when lever is 13 mm (1/2") from handlebar grip. If not, do not tamper with the brake, contact your servicing dealer.

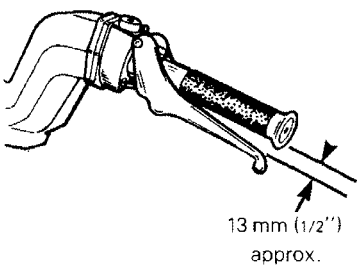

The brake mechanism is a self-adjusting type. If a quicker brake response is desired, strongly pull the brake lever several times, this will actuate the self adjusting mechanism.

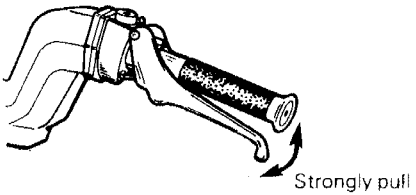

Spark Plugs

Disconnect the spark plug wires and remove the spark plugs.

Check the condition of the plugs.

- A brownish tip reflects ideal conditions. (Correct carburetor, spark plug heat range; etc.).
- A black insulator tip indicates fouling caused by: carburetor idle speed mixture and/or high speed mixture too rich, incorrect fuel mixture ratio, wrong type of spark plug (heat range), or excessive idling.
- A light grey insulator tip indicates a lean mixture caused by; carburetor high speed mixture adjusted too lean, wrong spark plug heat range, incorrect fuel mixture ratio, or a leaking seal or gasket.

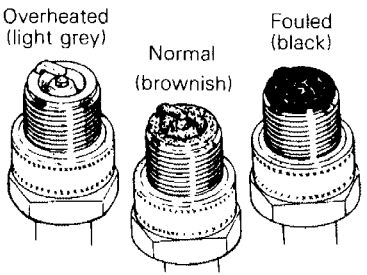

CAUTION: If spark plug condition is not ideal, contact your authorized dealer.

Check spark plug gap using a wire feeler gauge.

Reinstall plugs and connect wires.

Battery (Electric Start Models)

Check electrolyte level weekly. Electrolyte level must be at upper level line on battery casing. If necessary add distilled water.

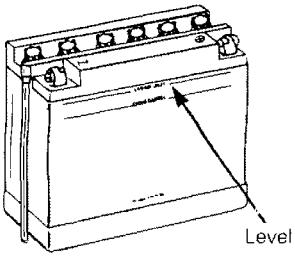

Battery connections must also be free of corrosion. If cleaning is necessary remove corrosion using a stiff brush then clean with a solution of baking soda and water. Rinse and dry well.

CAUTION: Do not allow cleaning solution to enter battery. It will destroy the chemical properties of the electrolyte.

After reconnecting battery coat battery terminals and connectors with petroleum jelly to prevent corrosion.

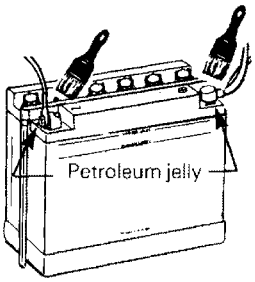

Check that battery is well secured and that battery overflow tube is not blocked or kinked.

WARNING: Overflow tube must be free and open. A kinked or bent tube will restrict ventilation and create gas accumulation that could result in an explosion. Avoid skin contact with electrolyte.

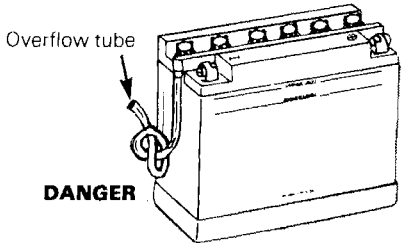

CAUTION: Prior to charging the battery, always remove it from the vehicle to prevent electrolyte spillage.

Suspension Condition

Visually inspect all suspension components including slider shoes, springs, wheels, etc...

NOTE: During normal driving, snow will act as a lubricant and coolant for the slider shoes. Extensive riding on ice or sanded snow, (not to mention dirt, asphalt, etc. never recommended) will create excessive heat build-up and cause premature slider shoe wear.

Suspension Adjustment

The suspension is adjustable. The front adjustment for surface condition, the rear for driver's weight. Use the special key located in tool box.

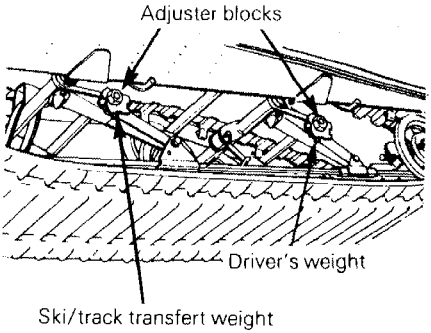

When the front adjuster blocks are at the lowest elevation more weight is distributed on the skis.

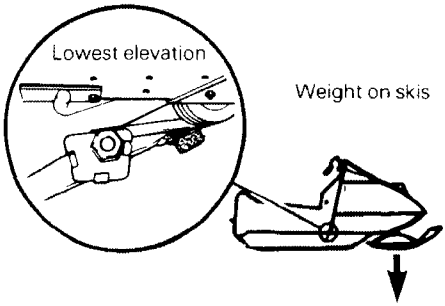

At the highest position the weight is transferred from the skis to the track. The rear adjuster blocks should be adjusted to suit the driver's preference.

CAUTION: Always turn the left side adjuster blocks in a clockwise direction, the right side blocks in a counter-clockwise direction. Left and right adjuster blocks of each adjustment must always be set at the same elevation.

Track Condition

Lift the rear of the vehicle and support it off the ground. With the engine off, rotate the track by hand, and inspect condition. If worn, cut or track fibers are exposed or missing or defective inserts or guides are noted, contact your dealer.

WARNING: Do not operate a snowmobile with a cut, torn or damaged track.

Track Tension and Alignment

Tension:

Lift the rear of vehicle and support with a mechanical stand. Allow the slide to extend normally. Check the gap 13 mm (1/2") between the slider shoe and the bottom inside of the track. If the track tension is too loose, the track will have a tendency to thump.

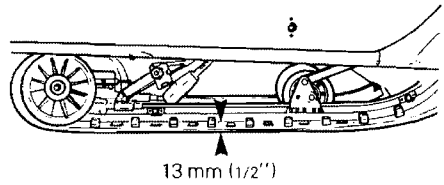

CAUTION: Too much tension will result in power loss and excessive stresses on suspension components.

If necessary to adjust. Loosen the rear idler wheel retaining screw and the adjuster bolt lock nut; then loosen or tighten the adjuster bolts located on the inner side of the rear idler wheels. If correct tension is unattainable. Contact your dealer.

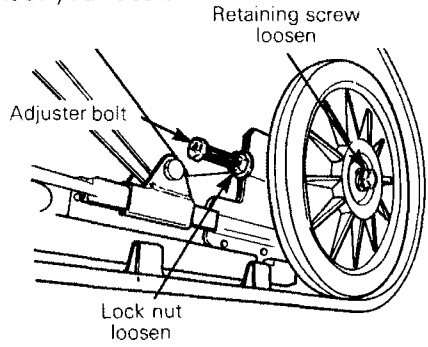

NOTE: Track tension and alignment are inter-related. Do not adjust one without the other.

Alignment:

Start the engine and accelerate slightly so that track turns slowly. Check that the track is well centered; equal distance on both sides between edges of track guides and slider shoes.

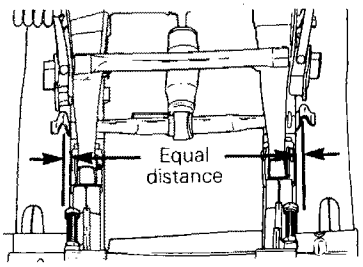

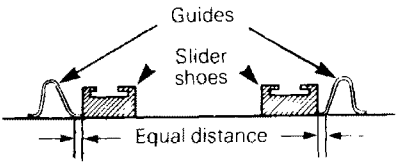

◆ **WARNING: Before checking track alignment, ensure that the track is free of all particles which could be thrown out while track is rotating. Keep hands, tools, feet and clothing clear of track. Ensure no-one is standing in close proximity to the vehicle.**

To correct, stop the engine loosen the rear idler wheels retaining screws then loosen the lock nuts and tighten the adjuster bolt on side where the slider shoe is the furthest to the track insert guides.

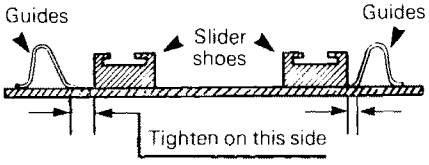

Tighten lock nuts and recheck the alignment. Ensure to retighten the idler wheel retaining screws.

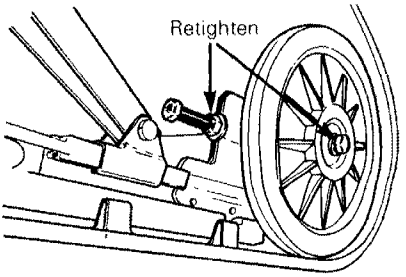

Drive Pulley

Inspect the Duralon bushing condition by checking the free-play of the sliding half pulley. This is achieved by restraining the inner half and checking if the sliding half moves in the direction of the arrows more than 3 mm (1/8"). If so contact your dealer.

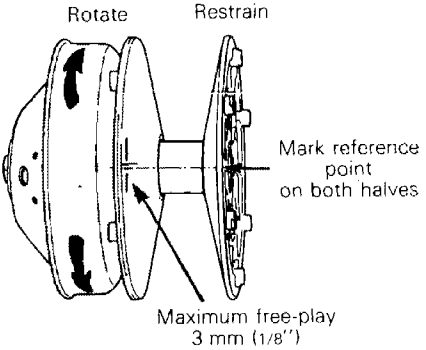

Steering Mechanism

Inspect the steering mechanism for tightness of components (steering arms, tie rods, ball joints, spring coupler bolts, etc.). If necessary, replace or retighten.

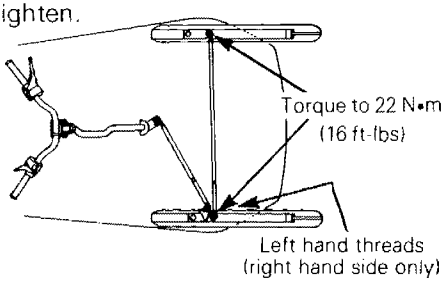

CAUTION: Do not overtighten the left hand threaded ball joint jam nut.

WARNING: The ball joint socket must run parallel with the steering arm. The socket must be restrained when tightening the tie rod end lock nuts.

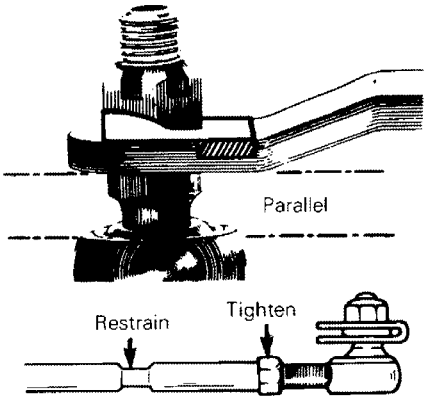

Check the condition of the skis and the ski runners. Replace if worn more than half.

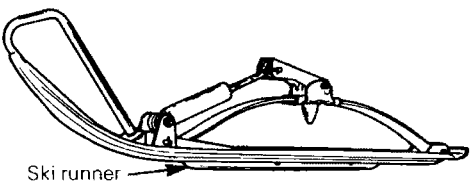

Steering Adjustment

Skis should have a toe out of 3 mm (1/8"). To check, measure the distance between each ski at the front and rear of the leaf springs. The front distance should be 3 mm (1/8") more than the rear when the handlebar is horizontal.

IMPORTANT: Close the front of the skis manually to eliminate all slack from the steering mechanism.

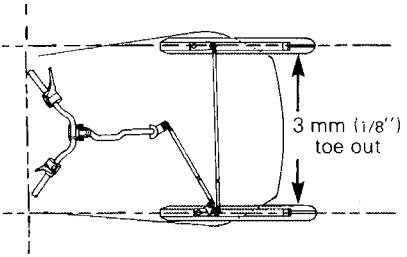

If adjustment is required:

Loosen the lock nuts of the longer tie rod. Turn the tie rod manually until the skis are properly aligned. Firmly retighten the lock nuts.

The handlebar should also be horizontal when the skis are pointed toward the front.

To adjust:

Loosen the lock nuts of the shorter tie rod. Turn the tie rod manually until the handlebar is horizontal. Retighten the lock nuts firmly.

Muffler attachment

The engine/exhaust system parts are vital toward efficient muffler function. Check all attachments. Replace the springs and/or tighten if necessary.

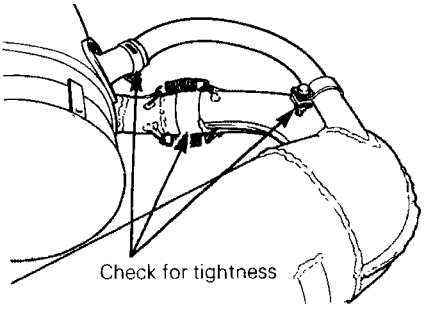

On fan cooled models, ensure that the forced flow system is well aligned and tightened.

CAUTION: Do not operate vehicle with muffler disconnected otherwise serious engine damage will occur.

Engine Head Nuts

With the engine cold, check that the engine head nuts are tight and equally torqued to 22 N•m (16 ft-lbs). Follow the illustrated sequence.

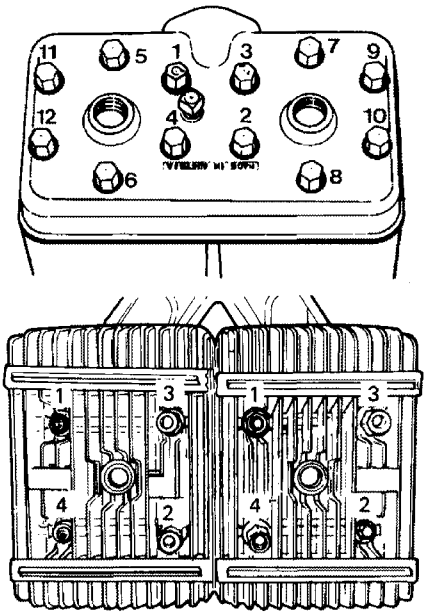

IMPORTANT: The engine head nut torque should be checked after the first 5 hours of operation.

Engine Mount Nuts

Check the engine mount nuts for tightness. Retighten if necessary.

Carburetor Adjustment

CAUTION: Never operate your snowmobile with the air intake silencer disconnected. Serious engine damage will occur if this notice is disregarded.

A) Air Screw Adjustment

Completely close the air screw (until a slight reseating resistance is felt) then back off screw: 1 turn ± 1/2.

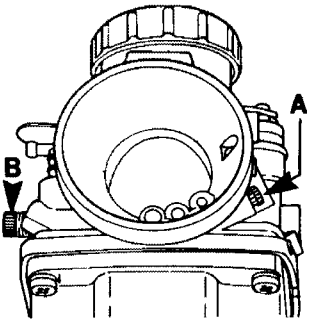

B) Idle Speed Adjustment

Turn idle speed screw clockwise until it contacts the throttle slide then continue turning two (2) additional turns. This will provide a preliminary idle speed setting. Start engine and allow it to warm then adjust idle speed to 1800-2000 R.P.M. by turning idle speed screw clockwise or counter-clockwise.

CAUTION: Do not attempt to set the idle speed by using the air screw. Severe engine damage can occur. If idle speed is unattainable contact your authorized dealer.

Air Silencer

The air intake silencer elbow must always be turned to the front of the vehicle when operated in cold or warm temperature.

If the vehicle is to be operated in deep powdered snow it is recommended to turn the elbow towards the rear of the vehicle.

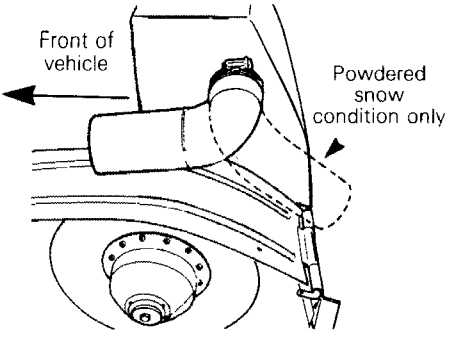

Oil Injection Pump Adjustment

CAUTION: The carburetor must be adjusted before adjusting the oil injection pump. Make sure the idle speed is 2000 RPM.

To adjust:

Eliminate the throttle cable free-play by pressing the throttle lever until a light resistance is felt, then hold in place.

The aligning marks on the pump casting and lever must align perfectly. If not, contact your dealer.

Injection pump should be adjusted by your dealer.

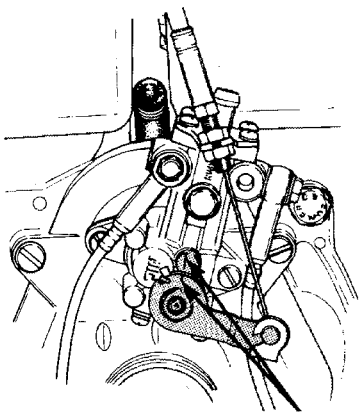

Cooling System (L/C models only)

Check condition of hoses and clamps tightness. Using a hydrometer check that the anti-freeze solution is strong enough for the temperature in which the vehicle is operated.

NOTE: Should the coolant temperature raise above recommended range 50°-80°C (120°-180°F), hose off grime from the heat exchanger (underneath the frame above the track).

Fan Belt

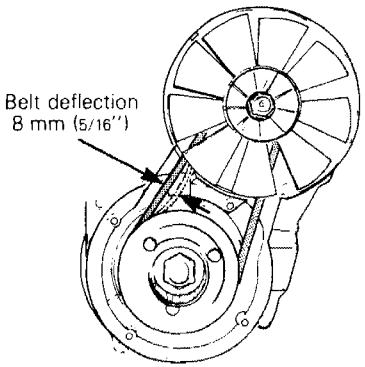

If the belt seems damaged or if tension is incorrect, contact your dealer immediately.

WARNING: If fan protector is removed, always reinstall after servicing.

Headlamp Beam Aiming

The angle of the headlamp beam has been pre-adjusted prior to delivery. Should you wish re-adjustment, place the vehicle on a flat surface 7.6 m (25') from a wall or screen.

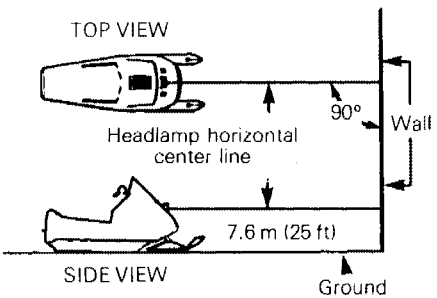

With the suspension correctly adjusted, the rider seated on the vehicle and the high beam ON check that the center of high intensity zone of high beam is 50 mm (2") below horizontal line of headlamp height.

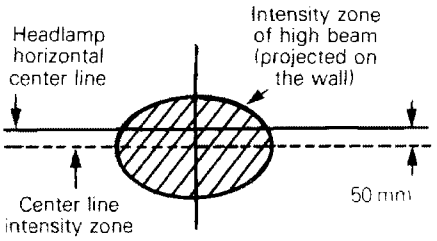

To adjust, remove headlamp chrome ring, turn upper or lower adjusting screws to obtain desired beam position.

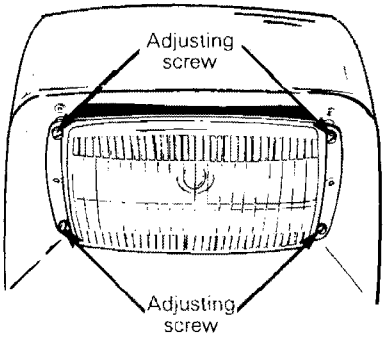

Bulb Replacement

If the headlamp bulb is burnt, tilt hood, unplug the connector from the headlamp. Remove the rubber boot and unfasten bulb retainer clips. Detach the bulb and replace.

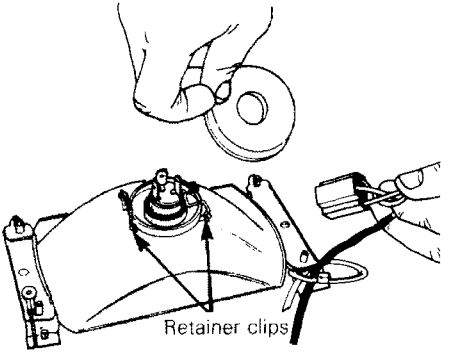

If taillight bulb is burnt, expose the bulb by removing the red plastic lens. To remove, unscrew the two (2) Phillips head screws.

◆ **WARNING: Always check light operation after bulb replacement.**

General Inspection

Check the electrical wiring and components, retighten loose connections. Check for stripped wires or damaged insulation. Thoroughly inspect the vehicle and tighten loose bolts, nuts and linkage. Inspect skis and ski runners for wear.

◆ WARNING: Only perform such procedures as detailed in this manual. It is recommended that dealer assistance be periodically obtained on other components/systems not covered in this manual. Unless otherwise specified, engine should be turned OFF for all lubrication and maintenance procedures.

Cooling System (L/C models)

The complete engine cooling system should be drained and refilled with a new coolant mixture.

◆ WARNING: Never drain or refill the cooling system when the engine is hot.

To drain the cooling system, siphon the coolant mixture from the coolant tank, using a primer pump and a length of plastic hose and steel tubing inserted as deep as possible into the lower hose of the tank.

◆ WARNING: Use a PRIMER PUMP to siphon the coolant mixture. Do not siphon with your mouth. The coolant mixture is poison and can be fatal if swallowed.

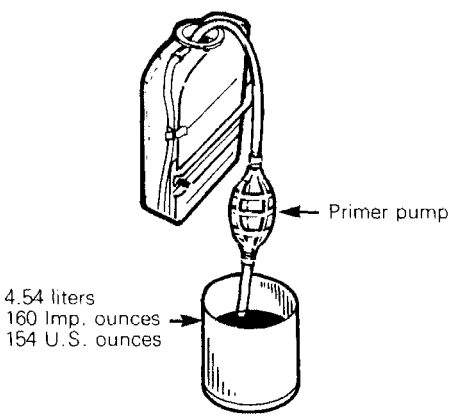

When the coolant level is low enough, remove the engine filler plug.

▼ CAUTION: To prevent rust formation in the cooling system, always replenish the system with the recommended solution (60% antifreeze 40% water).

To refill the cooling system:

– Remove engine filler plug.

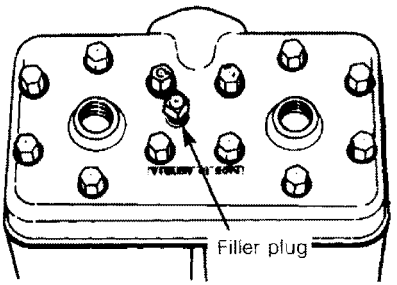

– Refill tank until coolant overfills at filler hole.

– Reinstall filler plug.

Continue to pour the liquid in the coolant tank until level reaches 2.5 mm (1") below filler neck.

Reinstall tank cap and start engine; let engine run until it reaches its operating temperature and thermostat opens. Allow it to run a few minutes more. Stop engine and check coolant level, refill as necessary.

◆ WARNING: Before removing the cap place a cloth over the coolant tank and release the cap to the first step to release the pressure. Loss of fluid and possibility of severe burns could occur, if this notice is disregarded.

Track

Inspect the track for wear, cuts, missing track guides and broken rods. Make any necessary replacement.

◆ **WARNING: Do not operate a snowmobile with a cut, torn or damage track.**

Lift the rear of vehicle until track is clear of the ground then support with a brace or trestle. The snowmobile should be stored in such a way that the track does not stay in contact with the cement floor or bare ground.

○ **NOTE:** The track should be rotated periodically, (every 40 days). Do not release track tension.

▼ **CAUTION: To prevent track damage, temperature in the storage area must not exceed 38°C (100°F).**

Slide Suspension

Remove any dirt or rust. Grease idler wheels at grease fittings. Wipe off surplus. Replace worn slider shoes.

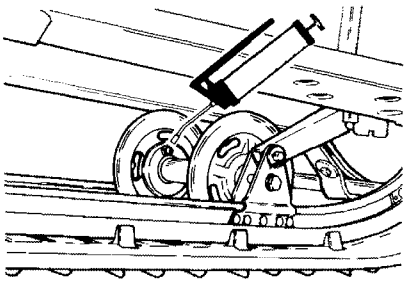

Ski

Wash or brush all dirt or rust accumulation from the skis and springs. Grease the ski legs at the grease fittings. Check the condition of the skis, ski runners and leaf springs. Replace if weak or worn more than half.

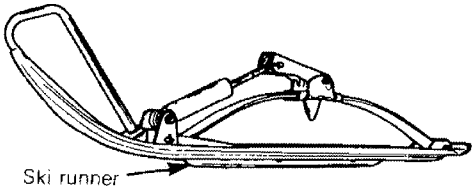

Controls

Lubricate the steering mechanism. Inspect all components for tightness, (spring coupler bolts, steering arm locking bolts, tie rods, ball joints, etc.). Tighten if necessary. Oil moving joints of the brake mechanism.

◆ **WARNING: Do not lubricate the throttle and/or brake cables and housings. Avoid getting oil on the brake pads.**

Coat all electrical connections and switches with a greaseless metal protector. If unavailable, use petroleum jelly.

Chaincase

Drain the chaincase and refill to proper level, using fresh chaincase oil. To drain, remove the chaincase cover.

Fuel Tank

Remove the cap then using a syphon, remove the gasoline from tank.

◆ **WARNING: Gasoline is flammable and explosive under certain conditions. Always manipulate in a well ventilated area. Do not smoke or allow open flames or sparks in the vicinity.**

Carburetor

Carburetor must be dried out completely to prevent gum formation during the storage period.

Once the fuel tank is emptied, remove the float chamber drain plug on each carburetor. Drain carburetor.

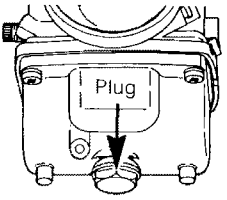

Re-install plug and connect fuel line.

Check all fuel lines, replace if necessary.

Engine and Primer Lubrication

Engine internal parts must be lubricated to protect cylinder walls from possible rust formation during the storage period.

To perform the storage procedures (engine and primer valve) proceed as follows:

Engine

1. Start the engine and allow it to run at idle speed until the engine reaches its operational temperature.
2. Stop the engine, remove the air silencer box, start the engine.
3. Using Bombardier Snowmobile Injection Oil, squirt oil into the carburetor throat until the engine dies.
4. Remove the spark plugs and pour approximately 85 mL (3 fl. oz. Imp., 3 fl. oz. U.S.) of oil into the cylinders.
5. Crank the engine to allow the crankshaft to turn 2 or 3 revolutions.
6. Reinstall the spark plugs and the air intake silencer.

Do not run engine during strorage period.

Primer valve

1. Disconnect the inlet primer hose from the primer valve.

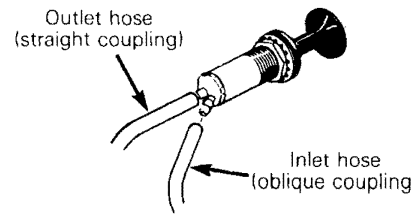

2. Hold the hose higher than the gas tank to prevent gasoline from draining.
3. Using an appropriate hose, connect one end of the hose to the inlet of the primer valve and place the other end in a Bombardier Snowmobile Injection Oil container.
4. Activate the primer in order to fill it with oil.
5. Reinstall the inlet primer hose to the primer valve.

Drive Pulley

Inspection and cleaning must be performed by the dealer at the end of each season.

Chassis

Clean the vehicle thoroughly, removing all dirt and grease accumulation.

CAUTION: Plastic alloy components such as fuel tank, windshield, controls, etc., can be cleaned using mild detergents or isopropyl alcohol. Do not use strong soaps, degreasing solvents, abrasive cleaners, paint thinners, etc.

Inspect the hood and repair any damage. Repair kits are available at your authorized dealer. Clean the frame. For the aluminum portion use only "Aluminum cleaner" and follow instructions on the container.

Touch up all metal spots where paint has been scratched off. Spray all bare metal parts with metal protector. Wax the hood for better protection.

NOTE: Apply wax on glossy finish of hood only. Protect the vehicle with a cover to prevent dust accumulation during storage.

CAUTION: If for some reason the snowmobile has to be stored outside it is necessary to cover it with an opaque tarpaulin. This caution will prevent the sun rays affecting the plastic components and the vehicle finish.

Battery

Remove battery from vehicle and clean outside surface of battery with solution of baking soda and water. Remove all deposits from posts then rinse with clear tap water.

CAUTION: Do not allow cleaning solution to enter battery interior since it will destroy the electrolyte.

Check electrolyte level. Refill if necessary with distilled water. Fully charge battery. (A stored battery should be recharged at least every 40 days).

CAUTION: Prior to charging the battery, always remove it from the vehicle to prevent electrolyte spillage.

WARNING: Gases given off by a battery being charged are highly explosive. Always charge in a well ventilated area. Keep battery away from cigarettes or open flames. Avoid skin contact with electrolyte.

Coat battery terminals with petroleum jelly and store unit in a cool, dry place.

General Inspection

Check the electrical wiring and components, retighten loose connections. Check for stripped wires or damaged insulation.

Thoroughly inspect the vehicle and tighten loose bolts, nuts and linkage.

NOTE: Leave the drive belt **off** the pulleys for the entire storage period.

PRE-SEASON PREPARATION

To simplify the pre-season preparation we have drawn up a small chart. The chart indicates servicing points to be performed by you and your servicing dealer. If these services are performed as suggested, your vehicle will give you many hours of fun and low cost use.

IMPORTANT: Observe all Warnings and Cautions mentioned throughout this manual which are pertinent to the item being checked. When component conditions seem less than satisfactory, replace with genuine Bombardier parts or suitable equivalents.

PRE-SEASON PREPARATION CHART	TO BE PERFORMED BY DEALER ● TO BE PERFORMED BY OWNER O
Change spark plugs*	O
Check chaincase, injection and rotary valve oil level	O
Clean or replace fuel filter	O
Check track condition, tension and alignment	O
Check and lubricate suspension	O
Inspect drive belt and install	O
Check throttle cable for damage and free operation	O
Check steering alignment and ski runner condition	O
Check electrical wiring (broken wire, damaged insulation)	O
Check fan belt condition and tension	O
Inspect condition of starting rope	O
Check tightness of all bolts, nuts and linkage	O
Check coolant condition and level	●
Inspect seals for possible cuts or leaks	●
Inspect brake condition and operation	●
Set engine timing	●
Check pulleys, verify components and clean. Lubricate.	●
Adjust carburetor(s)	●
Adjust oil injection pump	●

*◯ **NOTE:** Before installing new spark plugs, it is suggested to burn excess storage oil by starting the engine, using the old spark plugs. Only perform this operation in a well ventilated area.

TROUBLE SHOOTING

NOTE: The possible causes have been listed in an order of frequency. Therefore, items should be checked out in the same order as mentioned in the trouble shooting guide.

SYMPTOMS	POSSIBLE CAUSES	WHAT TO DO
Engine turns over but fails to start or starts with difficulty	1. No fuel to the engine	Check the tank level and fill it up. Check for possible clogging of fuel line, item 4.
	2. Flooded engine	Remove wet spark plugs, turn ignition to OFF and crank engine several times. Install clean dry spark plugs. Start engine following usual starting procedure. If engine continues to flood, see your dealer.
	3. Spark plug/ignition	Check for fouled or defective spark plug. Disconnect spark plug wire, unscrew plug and remove from cylinder head. Reconnect wire and ground exposed plug on engine cowl, **being careful to hold away from spark plug hole.** Follow engine starting procedure and check for spark. If no sparks appear, replace spark plug. If trouble persists, contact your dealer.
	4. Clogged fuel line (water or dirt)	Remove and clean the fuel filter. Change filter cartridge if necessary. Check condition and connections of fuel lines. Check the cleanliness of fuel tank.
	5. Incorrect carburetor adjustment	Contact your dealer.
	6. Incorrect injection pump adjustment	See your dealer.
	7. Engine timing	Engine timing may be defective or out of adjustment. Contact your dealer.
	8. Poor engine compression	Running with a lean fuel mixture may produce excessive engine wear resulting in poor engine compression. If this occurs, contact your dealer at once.
Engine will not turn manually	1. Seized engine	In the case of a seized engine contact your dealer.

SYMPTOMS	POSSIBLE CAUSES	WHAT TO DO
Engine lacks acceleration or power	1. Fouled or defective spark plug	Check item 2 of "Engine turns over but fails to start or starts with difficulty"
	2. Clogged fuel line (water or dirt)	Check fuel line condition. (See item 5 of "Engine turns over but fails to start or starts with difficulty").
	3. Carburetor	Contact your dealer.
	4. Ignition	First check item 2 and 3 of "Engine turns over but fails to start or starts with difficulty". If the ignition system still seems faulty, contact your dealer.
	5. Engine	If unable to locate specific symptoms, contact your dealer.
Engine continually backfires	1. Spark plug	Check item 2 of "Engine turns over but fails to start or starts with difficulty".
	2. Overheated	Coolant level too low. Refill (L/C models). Carburetor too lean, see your dealer..
	3. Engine timing incorrectly set	Contact your dealer.
Snowmobile cannot reach full speed	1. Drive Belt	Check for damaged or worn drive belt. Replace if necessary.
	2. Incorrect track adjustment	Check track tension and alignment. Readjust to specifications. (See Maintenance Section).
	3. Engine	Check item 1 to 5 of "Engine lacks acceleration or power.".
	4. Pulley misaligned	Contact your dealer.

TOOLS

As standard equipment each new snowmobile is supplied with a basic tool kit such as screwdriver, wrenches, emergency starter rope, etc...

Standard Tools

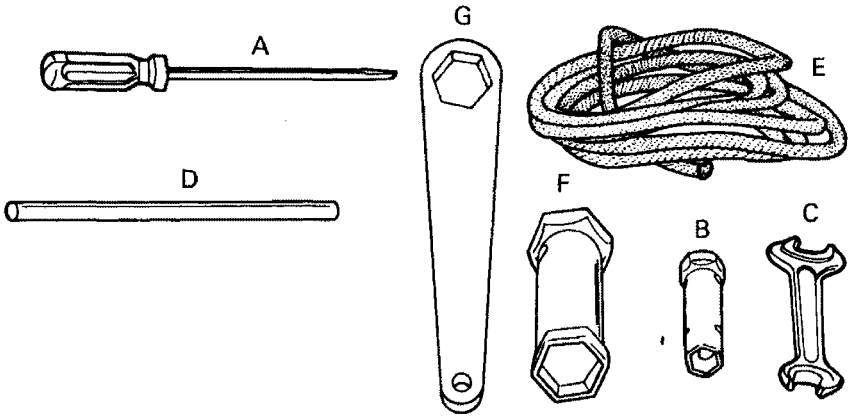

A. Screwdriver
B. Socket 10/13 mm
C. Open end wrench 10/13 mm
D. Socket wrench handle
E. Starter rope
F. Socket 17/21 mm
G. Suspension adjustment key

SPECIFICATIONS

	LIQUID COOLED	FAN COOLED
ENGINE		
No. of cylinders	2	2
Bore	69.5 mm (2.736")	72 mm (2.834")
Stroke	61 mm (2.401")	61 mm (2.401")
Displacement	462.8 cm^3 (28.24 in^3)	496.7 cm^3 (30.31 in^3)
Compression ratio (corrected)	7.0:1	6.2:1
Maximum R.P.M.	7500	7500
Carburetor type	Mikuni VM 34-227	VM 36-114
Carburetor adjustment:		
— air screw	1 1/2 turn out ± 1/8	1 1/2 turn out ± 1/8
— idle speed	1800-2000 R.P.M.	1800-2000 R.P.M.
Rotary valve oil reservoir — SI	568 ml	
Rotary valve oil reservoir — Imp./U.S.	20 ounces app.	
Cooling system capacity — SI	4.54 liters	
Cooling system capacity — Imp.	160 ounces	
Cooling system capacity — U.S.	154 ounces	
Antifreeze/water mixture	55/45	
Thermostat	43°C (110°F)	
Radiator pressure cap	13 lbs	
Fan belt free-play		8-9 mm (5/16")
Torque:		
— engine head nuts	M8: 22 N•m (16 ft-lbs)	M8: 22 N•m (16 ft-lbs)
— crankcase nuts	M8: 22 N•m (16 ft-lbs) M6: 9 N•m (6 ft-lbs)	M8: 22 N•m (16 ft-lbs)
— magneto ring nut	M22: 95 N•m (70 ft-lbs)	M22: 85 N•m (63 ft-lbs)
— fan nut		M16: 65 N•m (48 ft-lbs)
— crankcase engine support nuts	M10: 38 N•m (28 ft-lbs)	M10: 38 N•m (28 ft-lbs)
— exhaust manifold bolts	M8: 22 N•m (16 ft-lbs)	M8: 22 N•m (16 ft-lbs)
— electrical starter bolts	M8: 22 N•m (16 ft-lbs) M5: 4 N•m (3 ft-lbs)	M8: 22 N•m (16 ft-lbs) M5: 4 N•m (3 ft-lbs)
CHASSIS		
Overall length	276.8 cm (109")	276.8 cm (109")
Overall width	99 cm (39")	99 cm (39")
Overall height	106.7 cm (42")	106.7 cm (42")
Ski stance (center to center)	85.1 cm (33.5")	85.1 cm (33.5")
Ski alignment (toe out)	3 mm (1/8")	3 mm (1/8")
Torque:		
— steering arm/ski leg bolt	43 N•m (32 ft-lbs)	43 N•m (32 ft-lbs)
— steering column/handlebar	26 N•m (19 ft-lbs)	26 N•m (19 ft-lbs)
Weight	229 kg (505 lbs)	207 kg (451 lbs) manual 220 kg (484 lbs) electric
Bearing area	8710 cm^2 (1350 in^2)	8710 cm^2 (1350 in^2)
Ground pressure	2.58 kPa (.374 lbs/in^2)	2.30 kPa (.334 lbs/in^2) manual 2.47 kPa (.358 lbs/in^2) electric

	LIQUID COOLED	FAN COOLED
POWER TRAIN		
Track:		
— width	41.9 cm (16 1/2")	41.9 cm (16 1/2")
— length	314.9 cm (124")	314.9 cm (124")
— tension	13 mm (1/2") gap between slide shoe and bottom inside of track.	
— alignment	Equal distance between edges of track guides and slider shoes.	
Standard gear ratio	17/34	19/40
Drive belt:		
— number	414 3758 00	414 3758 00
— Max. width	33.3 mm (1 5/16")	33.3 mm (1 5/16")
— Min. width	30.1 mm (1 3/16")	30.1 mm (1 3/16")
Chaincase oil	200 mL (7 oz)	200 mL (7 oz)
ELECTRICAL		
Lighting system (output)	12 V. 140 watts	12 V. 160 watts
Bulb:		
— headlamp	60/60 W	60/60 W
— tail/stop	5/21 W	5/21 W
— speedometer	5W	5W
— tachometer	5W	
Fuse:		
— ignition switch	15 A	15 A (electric model)
— main wiring	30 A	30 A (electric model)
— tachometer	0.1 A	
Spark plug		
— type	NGK BR8ES	NGK BR7ES
— gap	0.4 mm (0.016")	0.4 mm (0.016")
Ignition timing:		
— timing mark (B.T.D.C.)	2.52 mm (.099") (21°)	2.29 mm (.090")(20°)
— stroboscopic timing	6000 R.P.M.	6000 R.P.M.
FUEL		
Gas type	Regular leaded or unleaded	
Fuel tank capacity		
— SI	27 liters	27 liters
— Imp.	6 gals	6 gals
— U.S.	7.2 gals	7.2 gals
Injection oil		
— type	Bombardier oil	
— tank capacity		
— SI	2.2 liters	2.2 liters
— Imp.	80 ounces	80 ounces
— U.S.	77 ounces	77 ounces
BRAKE		
Type	Disc, self adjusting	
Lining minimum thickness	3 mm (1/8")	3 mm (1/8")
Control lever adjustment	13 mm (1/2") minimum distance from handlebar grip when fully applied.	

Bombardier Inc. reserves the right to make changes in design and specifications and/or to make additions to, or improvements in its product without imposing any obligation upon itself to install them on its products previously manufactured.

WIRING DIAGRAM

FAN COOLED MANUAL START MODELS

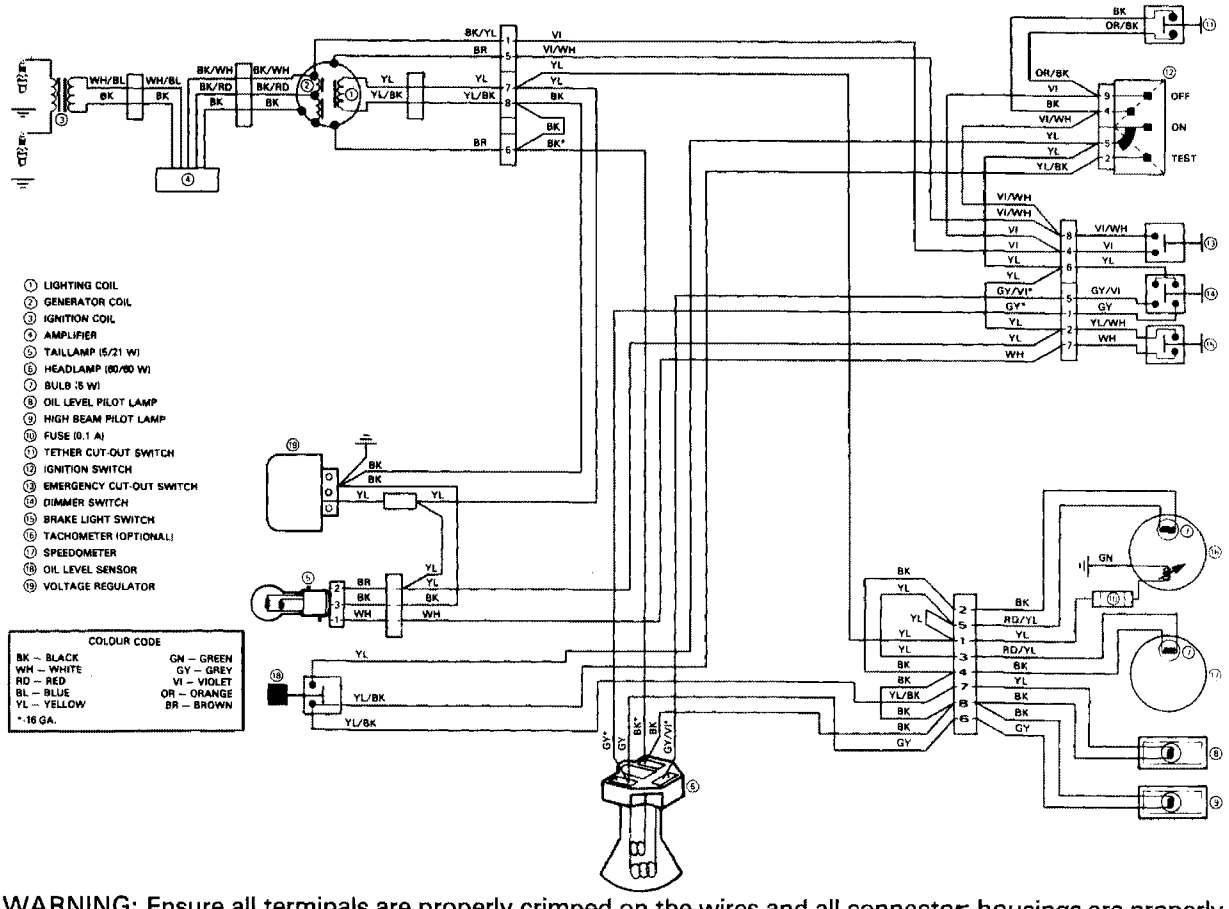

◆ WARNING: Ensure all terminals are properly crimped on the wires and all connector housings are properly fastened.

FAN COOLED ELECTRIC START MODELS

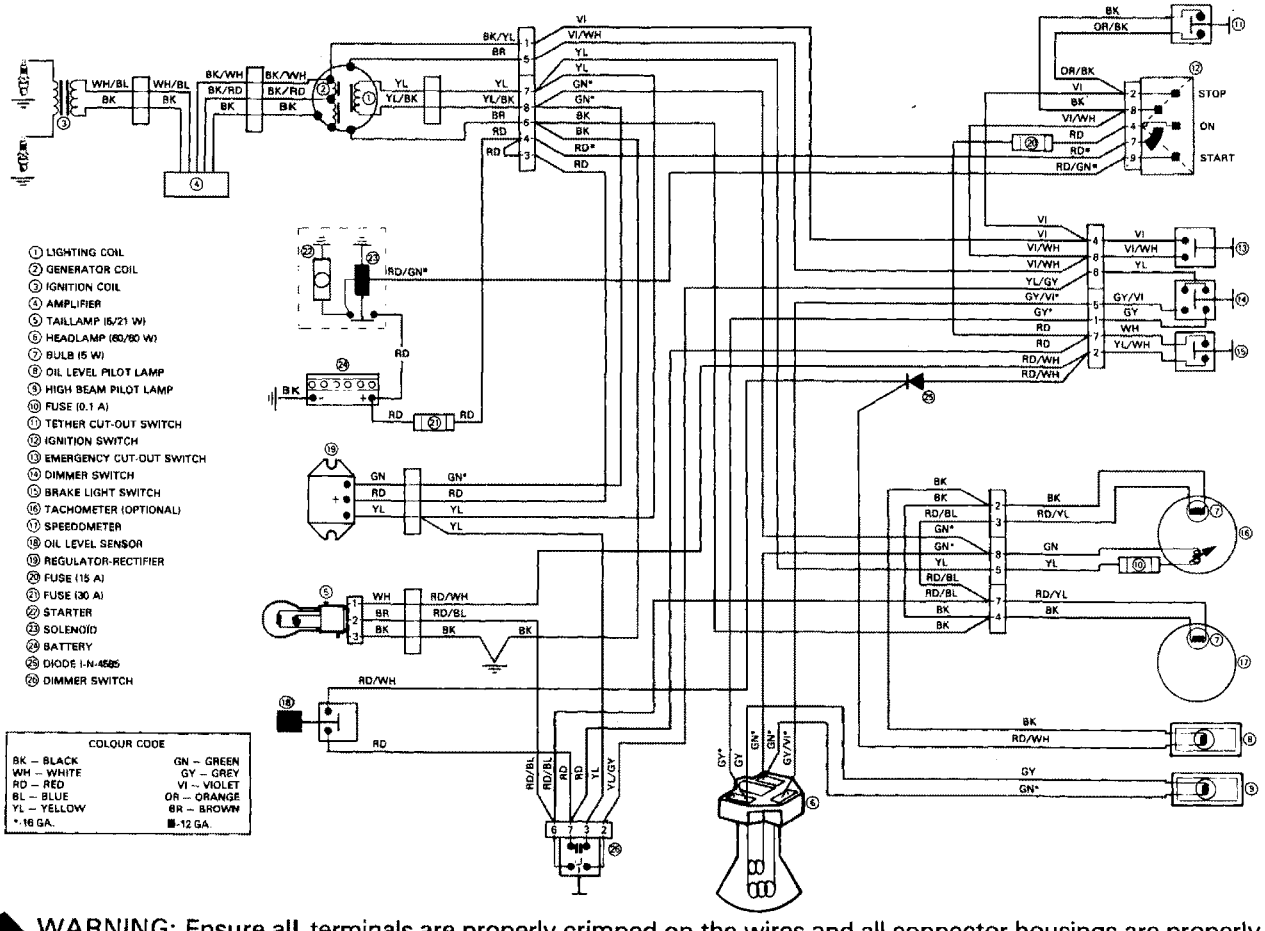

◆ WARNING: Ensure all terminals are properly crimped on the wires and all connector housings are properly fastened.

LIQUID COOLED MODELS

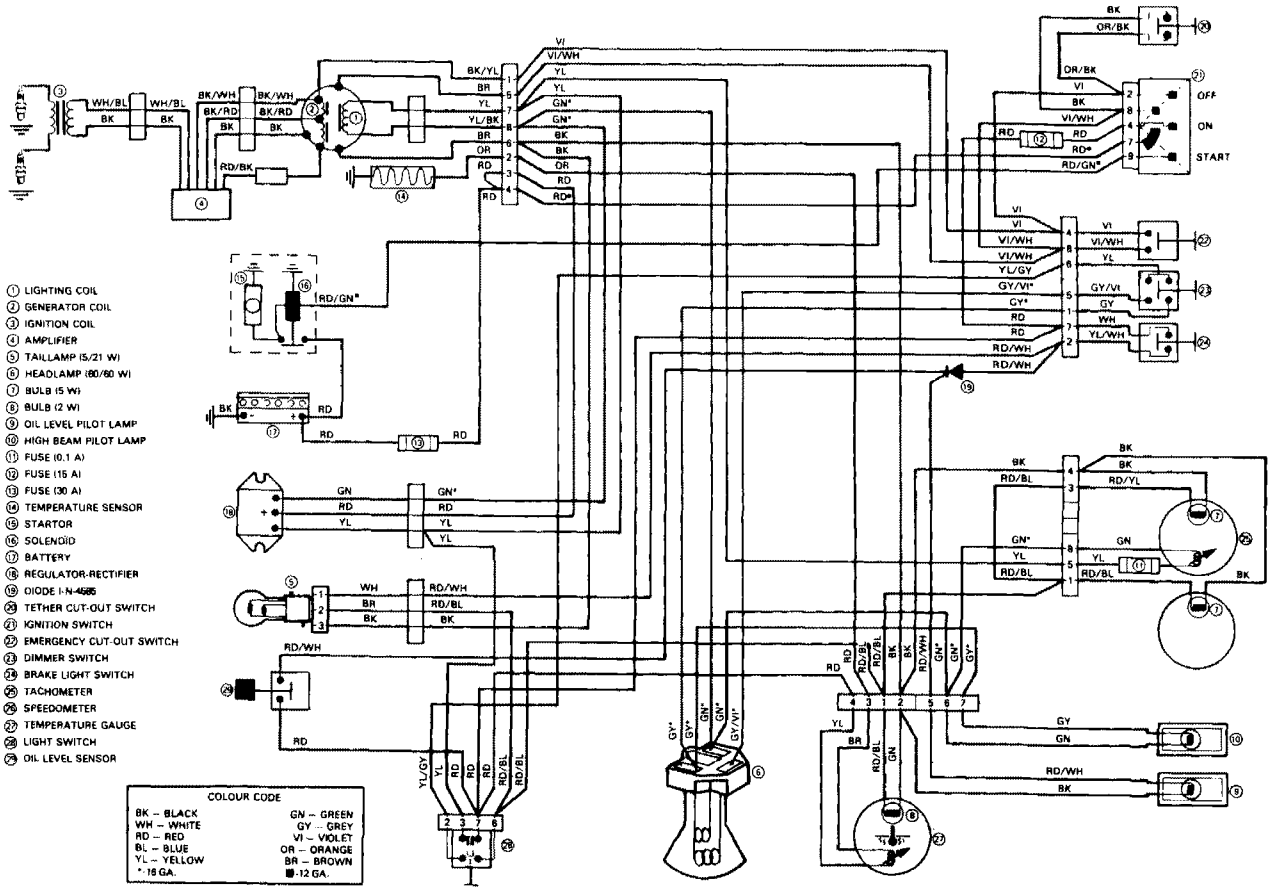

◆ WARNING: Ensure all terminals are properly crimped on the wires and all connector housings are properly fastened.

SI* METRIC INFORMATION GUIDE

BASE UNITS

DESCRIPTION	UNIT	SYMBOL
length	meter	m
mass	kilogram	kg
liquid	liter	L
temperature	celsius	°C
pressure	kilopascal	kPa
torque	Newton meter	N•m
speed	kilometer per hour	km/h

PREFIXES

PREFIX	SYMBOL	MEANING	VALUE
kilo	k	one thousand	1,000
centi	c	one hundredth of a	0.01
milli	m	one thousandth of a	0.001

*THE INTERNATIONAL SYSTEM OF UNITS (SYSTEME INTERNATIONAL) ABREVIATES "SI" IN ALL LANGUAGES.

NOTES

NOTES

NOTES

CHANGE OF ADDRESS AND OWNERSHIP

Any change in address or ownership should be brought to the attention of the manufacturer by completing and sending out the card supplied below.

CHANGE OF ADDRESS

VEHICLE IDENTIFICATION NUMBER | | | | | | | | | | |

OLD ADDRESS:

NAME

NO STREET APT.

CITY STATE/PROVINCE ZIP / POSTAL CODE

NEW ADDRESS:

NAME

NO STREET APT.

CITY STATE/PROVINCE ZIP / POSTAL CODE

CHANGE OF OWNERSHIP

VEHICLE IDENTIFICATION NUMBER | | | | | | | | | | |

The ownership of this vehicle is transferred

FROM:

NAME

NO STREET APT.

CITY STATE/PROVINCE ZIP / POSTAL CODE

TO:

NAME

NO STREET APT.

CITY STATE/PROVINCE ZIP / POSTAL CODE

BOMBARDIER INC.
ATT.: WARRANTY DEPARTMENT
VALCOURT, QUEBEC
CANADA, J0E 2L0

BOMBARDIER INC.
ATT.: WARRANTY DEPARTMENT
VALCOURT, QUEBEC
CANADA, J0E 2L0