SUPER-MOD 1981

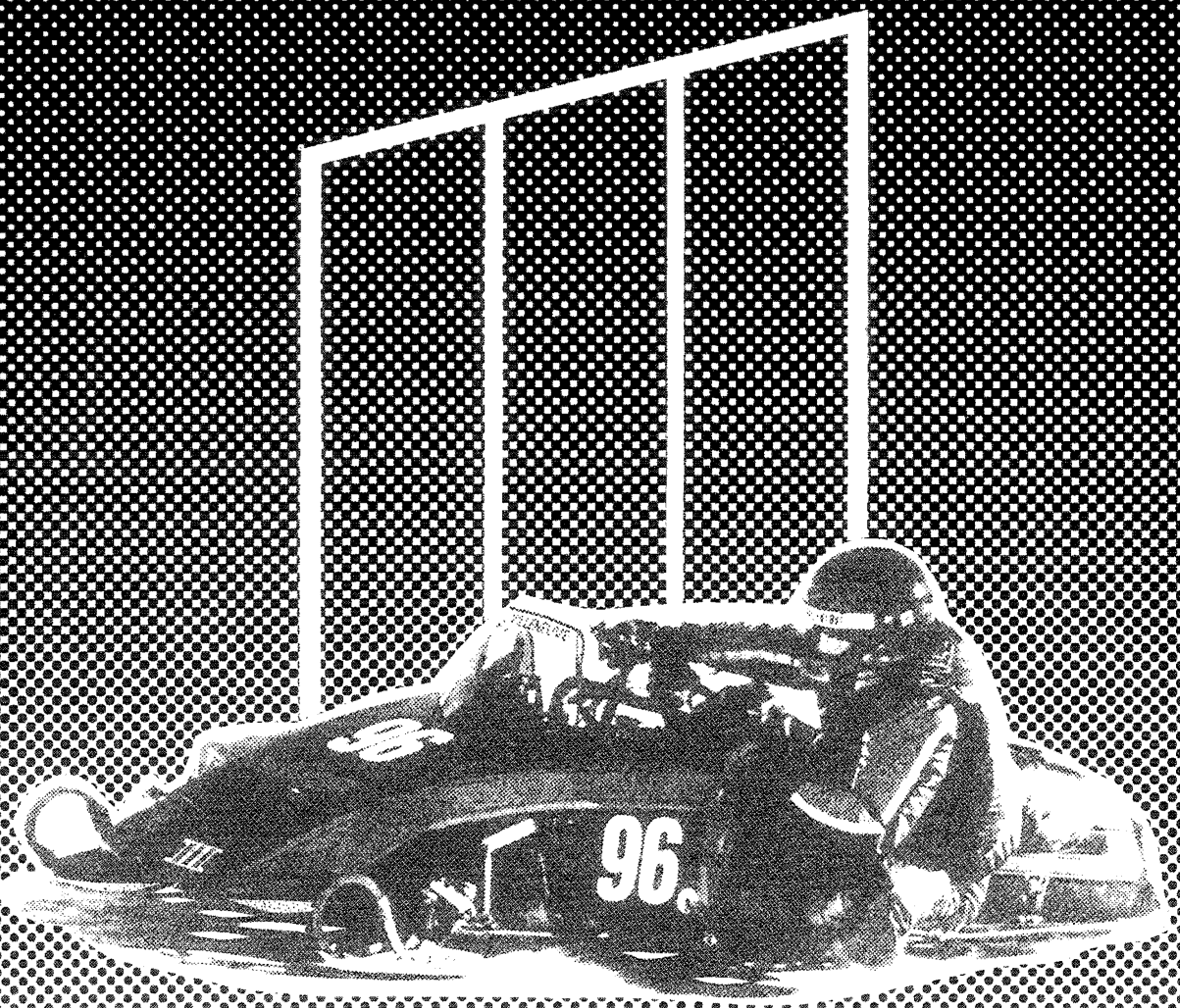

OPERATOR'S MANUAL

BOMBARDIER® SNOWMOBILES

® *Trademarks of Bombardier Limitée
All rights reserved © Bombardier Limitée

Litho'd in Canada

414 4728 00

SUPER-MOD

This vehicle has been designed for and should be used on an oval race track only.

The performance of this snowmobile significantly exceeds that of other snowmobiles you may have operated. Therfore, use of this vehicle should be restricted to experienced snowmobile racers.

◆ WARNING: The design of this snowmobile differs considerably from most other snowmobiles. Maintenance and adjustment must be performed only by a knowledgeable mechanic. Always refer to operator manual.

All warranties on 1981 Super-Mod either expressed or implied including any implied warranty of merchantability and any implied warranty of fitness for a particular purpose are hereby excluded and disclaimed.

December 1980

Bombardier Limitée
Valcourt, Quebec, Canada

The following are trademarks of Bombardier Limitée

BOMBARDIER	EVEREST	MOTO-SKI
SKI-DOO	CITATION	FUTURA
ALPINE	OLYMPIQUE	SPIRIT
BLIZZARD	T'NT	NUVIK
CARRY-BOOSE	NORDIK	MIRAGE
ELAN		SUPER SONIC
ELITE		ULTRA SONIC
GRAND PRIX SPECIAL		

TECHNICAL PUBLICATIONS
AFTER SALES SERVICE
BOMBARDIER LIMITÉE
VALCOURT, QUEBEC
CANADA, JOE 2L0

FOREWORD

CONGRATULATIONS

This tough, sleek and fast racing vehicle is the result of incomparable teamwork between Bombardier designers, engineers, technicians and top racing drivers. Realizing that this vehicle has been purchased for racing only, this manual has been prepared to acquaint the owner/operator with the various vehicle controls and owner-related maintenance instructions.

This manual emphasizes particular information denoted by the wording and symbols:

◆ WARNING: Identifies an instruction which, if not followed, could cause personal injury.

▼ CAUTION: Denotes an instruction which, if not followed, could severely damage vehicle components.

○ NOTE: Indicates supplementary information needed to fully complete an instruction.

All the information, illustrations and component / system descriptions contained in this manual are correct at the time of publication. However, Bombardier Limitée reserves the right to make changes in design and specifications, and / or to make additions to or improvements in its products without imposing any obligations upon itself to install them on its products previously manufactured.

All rights reserved © Bombardier Limitée

SAFETY IN MAINTENANCE

Observe the following precautions:

- Throttle mechanism should be checked for free movement before starting engine.
- Engine should be running only when pulley guard is secured in place.
- Never run engine without drive belt installed. Running an unloaded engine can prove to be dangerous.
- Never run the engine when the track of the vehicle is raised off the ground.
- It can be dangerous to run engine with the hood removed.
- Gasoline is flammable and explosive under certain conditions. Always perform procedures in a well ventilated area. Do not smoke or allow open flames or sparks in the vicinity. If gasoline fumes are noticed while driving, the cause should be determined and corrected without delay.
- Your snowmobile is not designed to be operated on public streets, road or highways.
- Maintain your vehicle in top mechanical condition at all times.
- Always make sure no loose parts, tools or foreign objects are left in the engine compartment.
- Your snowmobile is not designed to be driven or operated on black top, bare earth, or other abrasive surfaces. On such surfaces abnormal and excessive wear of critical parts is inevitable.
- Only perform procedures as detailed in this manual. It is recommended that dealer assistance be periodically obtained on other components/systems not covered in this manual. Unless otherwise specified, engine should be turned OFF for lubrication and maintenance procedures.
- Installation of other than "stock" equipment, including ski-spreaders, bumpers, pack racks, etc., could severely effect the stability and safety of your vehicle. Avoid "adding on" accessories that alter the basic vehicle configuration.
- The snowmobile engine can be stopped by activating the tether switch.
- This vehicle is not designed nor intended to be used for other than oval racing. Operating it for other use than competition is illegal.

Please read and understand all other warnings contained elsewhere in this manual.

THIS MANUAL SHOULD REMAIN WITH THE VEHICLE AT THE TIME OF RESALE.

INDEX

CONTROLS/INSTRUMENTS
Throttle control lever, brake control lever, tether cut-out switch, rewind starter, tachometer, temperature gauge, slider shoe lubricant valve, choke, fuel gauge, cab removal **4**

BREAK-IN PERIOD **5**

FUEL MIXING
Recommended gasoline, recommended oil, fuel mixture ratio, fuel mixing procedure **5**

PRE-START CHECK
Check points **6**

STARTING PROCEDURE **7**

MAINTENANCE CHART **8**

LUBRICATION PROCEDURES
Frequency, recommended lubricants, brake system bleeding rotary valve oil level, chaincase oil level, steering mechanism and front suspension, rear suspension, drive pulley, countershaft **9**

MAINTENANCE PROCEDURES
Pulley guard removal, drive belt removal, drive belt condition, drive belt tension, drive pulley, drive chain tension, track condition, track adjustment, track cleating, suspension condition, front suspension adjustment, steering mechanism, steering adjustment, rear suspension adjustment, cooling system, engine head nuts, engine mount nuts, exhaust system, spark plugs, carburetor adjustment, ignition timing procedure, vehicle general inspection, tail light bulb **12**

TROUBLE SHOOTING GUIDE **26**

STORAGE
Cooling system, track, suspension, skis, slider shoe lubricant tank, fuel tank, carburetors, cylinder lubrication, drive pulley, chaincase, controls, chassis, general inspection **29**

GEAR RATIO CHART **32**

SPECIFICATIONS **32**

CONTROLS/INSTRUMENTS

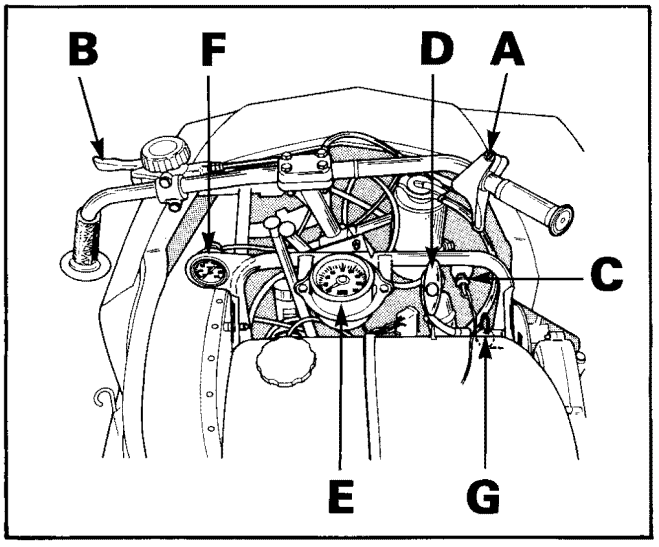

A) Throttle Control Lever
B) Brake Control Lever
C) Tether Cut-Out Switch
D) Rewind Starter Handle
E) Tachometer
F) Temperature Gauge
G) Slider Shoe Lubricant Valve

A) Throttle Control Lever

Located on right side of handlebar. When compressed, it controls the **engine speed** and the **engagement of the transmission.** When released, engine speed returns automatically to idle.

B) Brake Control Lever

Mounted on left side of handlebar when applied activates the hydraulic disc brake system binding the vehicle to a fast smooth stop.

C) Tether Cut-Out Switch

A pull switch located on the right side of steering support tube.

Attach tether cord to wrist or other convenient location before starting engine then fully insert tether cut-out cap on receptacle.

NOTE: The cap must be used at all time in order to operate the vehicle.

If emergency engine **"shut off"** is required, "pull" completely the cap from switch and engine power will automatically be shut "off".

WARNING: If the switch is used in an emergency situation the source of malfunction should be determined and corrected before restarting engine.

D) Rewind Starter

Auto rewind type located on right hand side of vehicle. To engage mechanism, pull handle.

E) Tachometer

The tachometer registers the impulses of magneto. Dial indicates the number of revolutions per minute (RPM) of the engine, multiplied by 100.

CAUTION: The tachometer is protected by a fuse, if tachometer stops operating check fuse condition and if necessary replace. The fuse is 0.1 amp. Do not use a higher rated fuse as this can cause severe damage to the tachometer.

F) Temperature Gauge

The gauge indicates engine coolant temperature. Normal operating temperature is 43 - 54°C (110 - 130°F). The coolant temperature can vary depending on driving condition however it should never exceed 80°C (180°F).

WARNING: Do not remove coolant tank cap unless pressure is released by pulling on the top lever, loss of fluid and possible severe burns could occur.

G) Slider Shoe Lubricant Valve

The valve is located at the right hand side of the vehicle in front of the fuel tank.

To open: lever must align with valve body.

To close: lever must be at 90° angle with valve body.

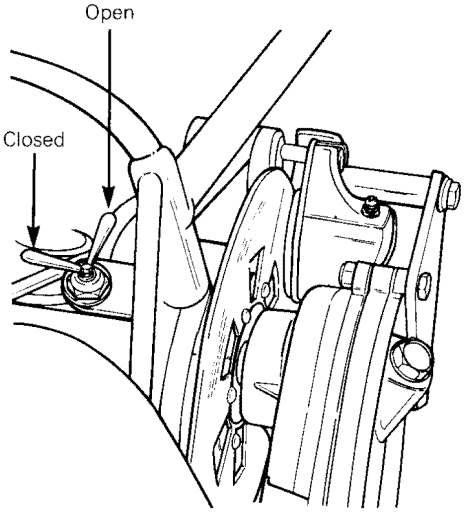

Choke

The choke levers are located on the left side of each carburetor. To engage choke depress each lever. To disengage lift levers.

NOTE: Do not operate vehicle with choke on.

Fuel Gauge

To check fuel level, simply look through the translucent tank.

WARNING: Never use a lite match or open flame to check fuel level.

Hood Removal

For those procedures that require hood removal, unhook side latches then remove hood from vehicle by sliding it forward.

WARNING: It is dangerous to run engine with hood removed.

BREAK-IN PERIOD

With Bombardier-Rotax engines, a break-in period of 2 operating hours is required before running the vehicle at full throttle. During this period, brief full throttle accelerations and constant speed variation will contribute to a good bread-in. Continued wide open throttle accelerations can be detrimental. Never let your engine overheat.

CAUTION: Incorrect or lack of a break-in period will result in engine horsepower loss.

NOTE: During the complete bread-in period, both main jets must remain identical. Afterwards recalibrate as per specifications. Refer to **main jet** in specifications section.

FUEL MIXING

Oil must be added to the gasoline in pre-measured amounts then both oil and gasoline should be thoroughly mixed together before fueling the tank.

Recommended Gasoline

High octane gasoline **must** be used. Ex.: Aviation gasoline light blue 100 octane or light green 100-130 octane.

CAUTION: Never experiment with different fuel or fuel ratios. Never use low lead or non leaded galine, naphtha, methanol or similar products.

Recommended Oil

Use a 50/1 Blizzard snowmobile oil, this type of oil is specially formulated to meet lubrication requirements of the high performance Bombardier-Rotax engine.

CAUTION: Use of other than recommended oil can result in engine damage.

Fuel Mixture Ratio

The importance of using the correct fuel mixture cannot be overstressed. An incorrect fuel ratio results in serious engine damage.

Recommended fuel/oil ratio is 20/1.

S.I.

1 can 500 ml oil to 10 liters = 20 to 1.

Imperial Measures

2 cans of 16 oz Blizzard oil to 4 Imp. gals = 20 to 1.

U.S. Measures

2 cans of 12 oz Blizzard oil to 4 U.S. gals = 20 to 1

NOTE: To facilitate fuel mixing, oil should be kept at room temperature.

Fuel Mixing Procedure

To mix the gasoline and oil always use a separate clean container. Never mix directly in your snowmobile tank. For best results, acquire two containers, either plastic or metal. Draw from one until empty then use the second one.

WARNING: Gasoline is flammable and explosive under certain conditions. Always perform procedures in a well ventilated area. Do not smoke or allow open flames or sparks in the vicinity. If gasoline fumes are noticed while driving, the cause should be determined and corrected without delay. Never add fuel while engine is running. Avoid skin contact with fuel at below freezing temperatures.

1. Pour approximately one gallon of gasoline into a clean container.

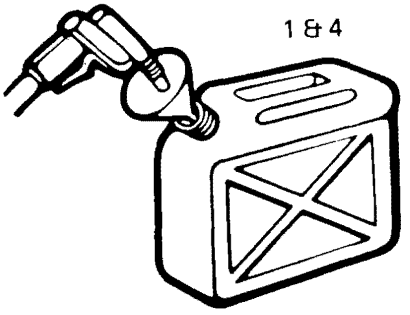

2. Add full amount of oil.

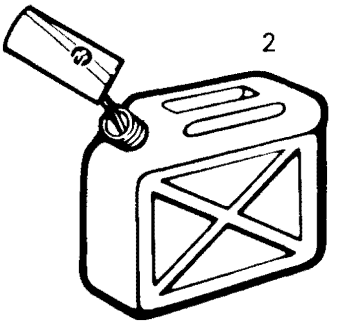

3. Replace container cap and shake the container thoroughly.

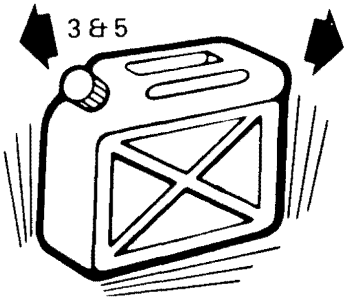

4. Add the remainder of the gasoline.
5. Once again thoroughly agitate the container. Then using a funnel with a fine mesh screen to prevent the entry of water and foreign particles, transfer mixture from container into the snowmobile tank.

NOTE: When using pre-mixed fuel, always shake the container thoroughly as the oil has a tendency to settle.

WARNING: Never 'top up' gas tank before placing the vehicle in a warm area. At certain temperatures, gasoline will expand and overflow.

PRE-START CHECK

Check Points

Throttle

Activate the throttle control lever several times to check that it operates easily and smoothly. The throttle control lever must return to idle position when released.

Skis and track

Check that the skis and the track are not frozen to the ground or snow surface and that steering operates freely.

Brake System Condition

Check brake hose for abrasion and signs of leakage.

Check brake pad condition, if less than: 1.6 mm (1/16") thick, the pads must be replaced.

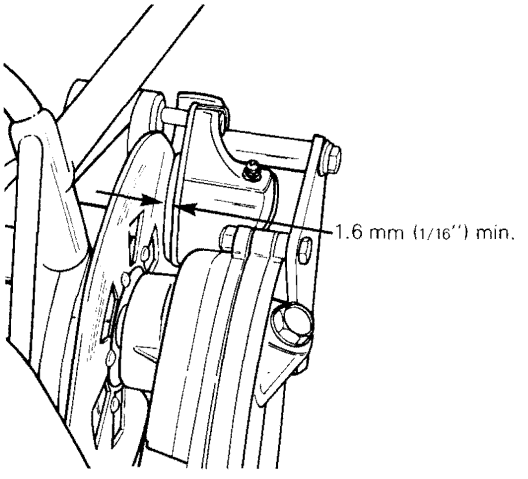

Check hydraulic brake oil level.

To check fluid level remove reservoir cover located on handlebar. Fluid must reach top lip of reservoir. If necessary to replenish use only hydraulic brake fluid meeting specification J-1703.

CAUTION: The entry of dirt or foreign particles into the brake fluid may require system flushing.

Activate the brake control lever and make sure the brake fully applies before the brake control lever touches the handlebar grip.

If a soft or spongy braking action is felt and oil level is normal, air may have entered the system.

To correct, bleed the brake system. Refer to the lubrication section for complete procedure.

Suspension slider shoe lubricant

Check hoses for signs of leakage.

Fill up tank with 50/50 windshield washer and antifreeze solution.

Coolant

Check coolant level. Liquid should be up to the lower portion of the top return hose. If additional coolant is necessary, always use a 50/50 (50 parts or water for 50 parts of anti-freeze) solution. When entire system has to be refilled, use a solution of 3 parts of anti-freeze for 2 parts of water. See cooling system in storage procedures.

◆ **WARNING: Before removing the cap always release the pressure by lifting the lever incorporated on the cap, loss of fluid and possibility of severe burns could occur.**

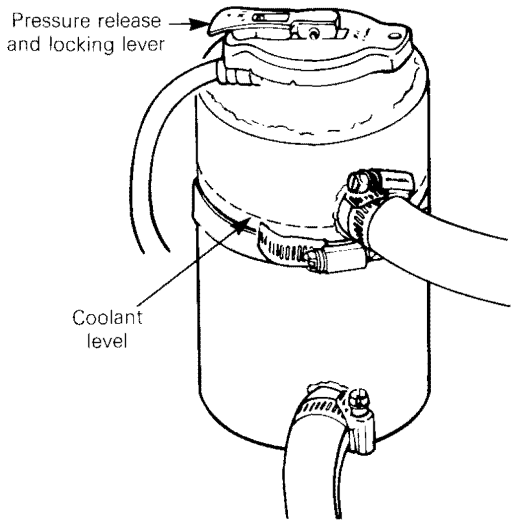

Fuel

Check fuel level

Safety

Verify that the path ahead of the vehicle is clear of bystanders and obstacles.

◆ **WARNING: Only start your snowmobile once all components are checked and functioning properly.**

STARTING PROCEDURE

1. **Test operation of throttle control lever.**
2. Engage choke by depressing each lever. To disengage choke simply lift the levers. The chokes should always be used for easier cold engine starts. After engine is warm, it is not necessary to use choke when starting. Do not operate vehicle with choke on.
3. Make sure that the tether cut-out cap is in position and that the cord is attached to your body.
4. Grasp manual starter handle firmly and pull slowly until a resistance is felt then pull vigorously. Slowly release rewind starter handle.

◆ **WARNING: Do not apply throttle while starting.**

5. Check operation of tether switch. Restart engine.

◆ **WARNING: If the switch is used in an emergency situation the source of malfunction should be determined and corrected before restarting engine.**

6. Allow the engine to warm before operating at full throttle.

▼ **CAUTION: Since engine cooling is in effect only when the vehicle is in motion, it is recommended that you do not allow the engine to idle for more than brief periods. Prolonged idling may cause engine damage.**

MAINTENANCE CHART

The following Maintenance Chart indicates regular servicing schecules to be performed on a race event, weekly or on a seasonal basis.

◆ **WARNING: Only perform such procedures as detailed in this manual. It is recommended that dealer assistance be periodically obtained on other components / systems not covered in this manual. Unless otherwise specified, engine should be turned OFF for all lubrication and maintenance procedures.**

Every Race Event — Refer to page

Brake system condition **6**
Brake system bleeding **12**
Rotary valve oil level **10**
Chaincase oil level **10**
Drive belt condition **12**
Pulley alignement and drive belt tension **12**
Drive pulley **13**
Drive chain tension **17**
Track condition **17**
Track adjustment **17**
Suspension condition **18**
Front suspension adjustment **18**
Steering mechanism **20**
Steering adjustment **20**
Rear suspension adjustment **21**
Cooling system **22**
Engine head nuts **23**
Engine mount nuts **23**
Exhaust system **23**
Spark plugs **23**
Carburetor adjustment **23**
Vehicle general inspection **25**

Weekly Event

Steering system lubrication **11**
Suspension lubrication **11**
Drive pulley lubrication **11**
Countershaft lubrication **11**

Seasonal Event

Brake oil change (bleeding) **10**

LUBRICATION PROCEDURE

Frequency

As with any mechanical product routine maintenance is necessary.

The steering system and suspension must be lubricated on a weekly basis or more often if the vehicle is operated in wet snow.

◆ **WARNING: Only perform such procedures as detailed in this manual. It is recommended that dealer assistance be periodically obtained on other components / systems not covered in this manual. Unless ogherwise specified, engine should be tuned OFF for all lubrication and maintenance procedures.**

Recommended Lubricants .....For

Super Grease
Bomb. P/N 498 0281 00 . . . Suspension and steering

Hydraulic Brake Fluid FA 73
Bomb. P/N 413 8011 00 . . . Brake system

Rotary Valve Oil
Bomb. P/N 413 8015 00 . . . Rotary valve

Chain Case Oil
Bomb. P/N 413 8019 00 . . . Chaincase

Dry Lubricant
Comet GP-730A
Comet P/N 204097
Bomb. P/N 414 3815 00 . . . Drive pulley

Anti-seize Lubricant
Bomb. P/N 413 7010 00 . . . Countershaft

Brake System Bleeding

If the reserve is low and/or air has entered the system creating a soft, spongy braking action, the following should be done:

Remove reservoir cover and "top up" fluid level. Install cover.

Use only hydraulic brake fluid meeting specifications J-1703.

CAUTION: The entry of dirt or foreign particles into the brake fluid may require system flushing.

NOTE: Retain this reservoir level throughout the following procedure.

Connect a bleeder drain to the valve and insert end of bleeder hose into a container of brake fluid.

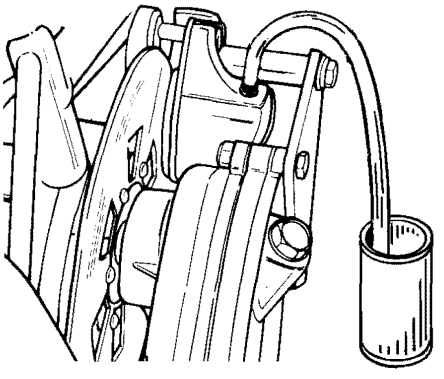

Repeatedly depress the brake lever in quick succession (pumping), to obtain pressure. Once obtained, hold lever, open bleeder valve then quickly depress brake lever. Close bleeder valve and allow brake lever to return slowly.

Continue pressing and releasing brake lever until the fluid injected into the container is air free.

Disconnect bleeder hose, recheck brake fluid.

NOTE: Brake fluid should be changed at least once every racing season.

Rotary Valve Oil Level

Check oil level frequently. Level should be maintained at approx. 25 - 30 cm (10 - 12") from top cap.

If necessary replenish to oil level line using " Castrol Injector Oil" or equivalent.

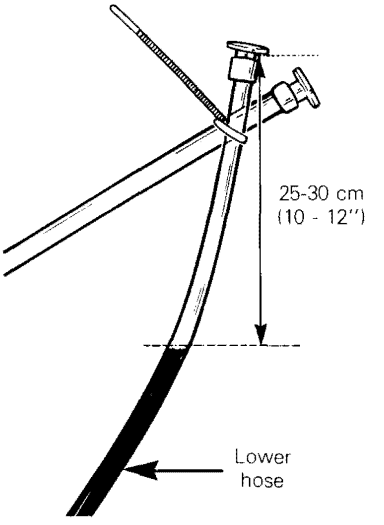

Chaincase Oil Level

Remove plug then using a rigid wire as "dipstick", check oil level. The oil level on the "dipstick" should be 50 mm (2"), replenish as necessary. The chaincase oil capacity is approximately 200 ml (7 ft oz).

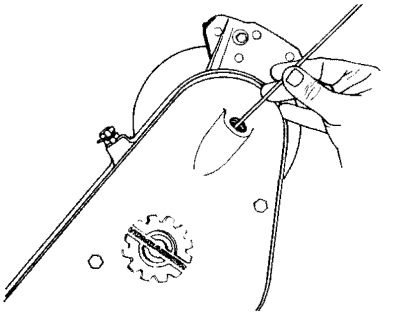

Steering Mechanism and Front Suspension

Lubricate all tie rod ends at grease fitting until new grease appears at joints. Oil ski leg / coupler bolts.

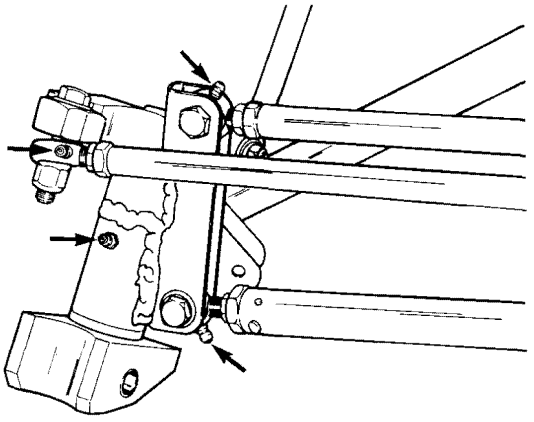

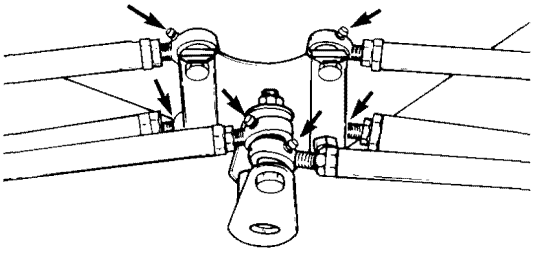

Lubricate steering trasfert shaft ball joints.

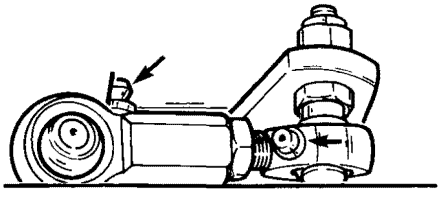

Lubricate stabilizer bar: remove stabilizer arms, pull bar and coat with grease.

CAUTION: Do not lubricate throttle and / or brake cable housings.

Rear Suspension

Lubricate all cross shafts and sleeves with anti-seize.

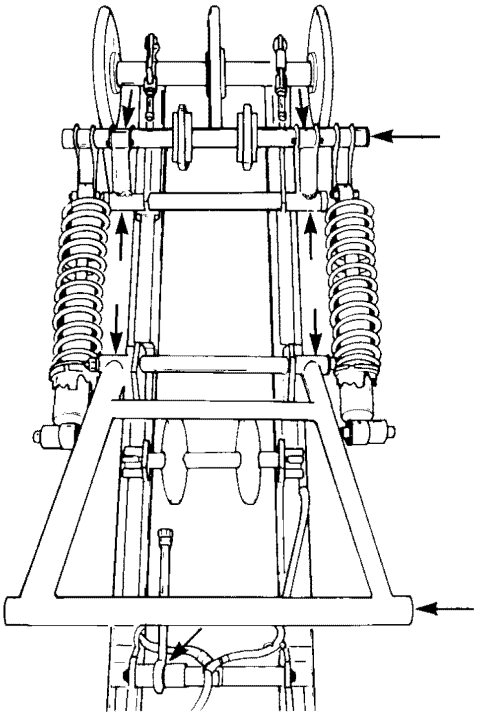

Drive Pulley

All moving parts and friction surfaces must be lubricate with dry lubricant.

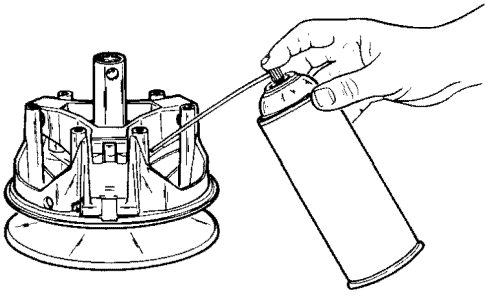

Countershaft

Remove the bolt locking the drivent pulley to its shaft and pull off the driven pulley ass'y. Lubricate the shaft using antiseize compound. Install pulley on shaft and torque the bolt to 5-7 N•m (4-5 ft-lbs).

Pulley Guard Removal

◆ **WARNING: Engine should be running only when pulley guard is secured in place.**

Drive Belt Removal

◆ **WARNING: Never start or run engine without drive belt installed. Running an unloaded engine is dagerous.**

1. Remove hood and pulley guard.
2. Open the driven pulley by twisting and pushing the sliding half. Hold in fully open position.
3. Slip slackened belt over the top edge of the sliding half.

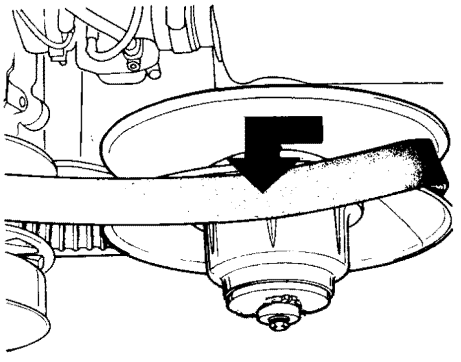

4. Slip the belt out from the drive pulley and remove completely from vehicle. To install drive belt, reverse procedure.

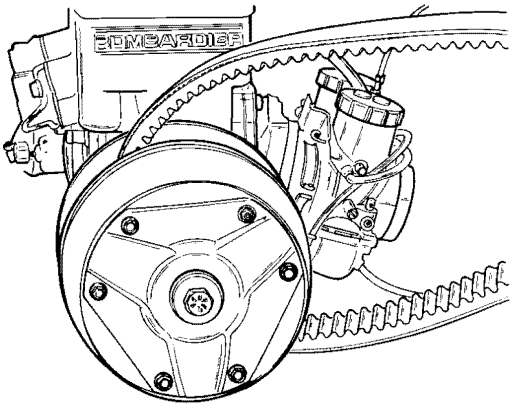

Drive Belt Condition

Inspect belt for cracks, fraying or abnormal wear (uneven wear, wear on one side, etc.). If abnormal wear is noted, probable cause is pulley misalignment. Check drive belt width. The drive belt width should not be less than 33.3 mm (1 5/16") wide. A too narrow belt will result in a loss of performance.

○ **NOTE:** When installing a new drive belt, a break-in period of 4 or 5 laps at no more than half throttle is strongly recommended.

Pulleys Alignment and Drive Belt Tension

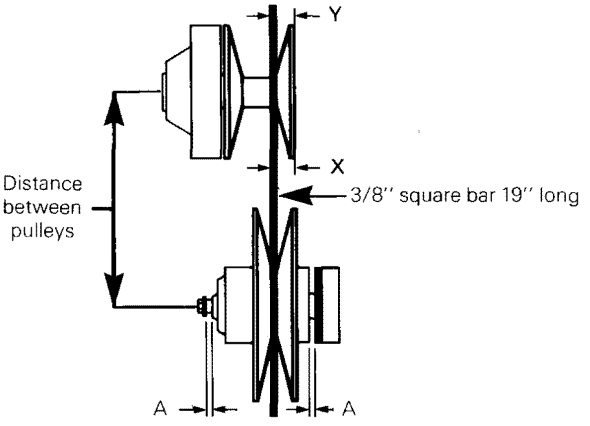

A free floating 0.5 mm (.020")

Dimension Y and X (offset); 34.1 mm (1 11/32").

▼ **CAUTION: Dimension "X" must never exceed dimension "Y". Dimension "Y" can exceed dimension "X" by 1.6 mm (1/16").**

The distance between pulleys should be 27 mm (10 9/16") c.c. however, maximum vehicle performance is obtained when the drive belt deflects by 32 mm (1 1/4") when a pressure of 6.8 kg (15 lbs) is applied on the drive belt.

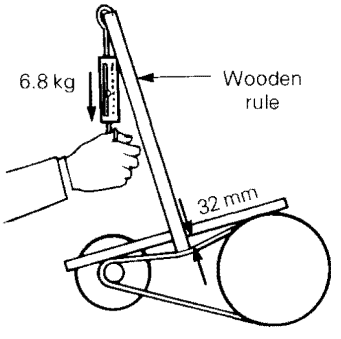

To obtain the proper belt deflection the driven pulley is equiped with three adjusting screws which increases or decreases the distance between pulley halves while at the same time attaining exact belt tension.

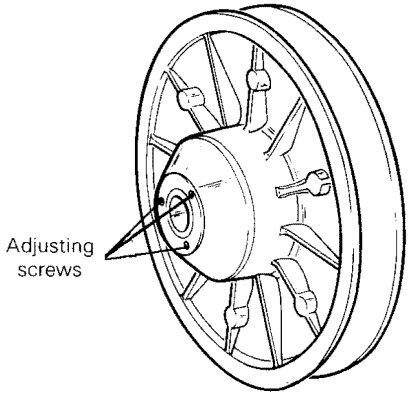

Adjustment

Equally tighten or slacken the adjusting screws in order to obtain the recommended belt deflection.

CAUTION: Ensure that the pulley width between each halves is the same all around.

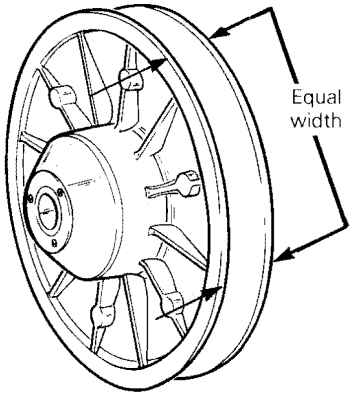

Using shims, adjust the driven pulley in order to have a free-play of 0.5 mm (.020") on each side.

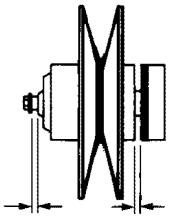

Drive Pulley

Drive pulley is assembled with a 75 lbs rated release spring (color coded blue).

Two optional release springs are supplied:

- color code: sliver
  spring rate: 60 lbs/in
- color code: yellow
  spring rate: 85 lbs/in

If more R.P.M. is needed, use a release spring with a higher spring rate and inversely.

NOTE: To obtain maximum output horsepower, pulley calibration must keep maximum engine R.P.M. to 9200.

DRIVE PULLEY SERVICE PROCEDURE

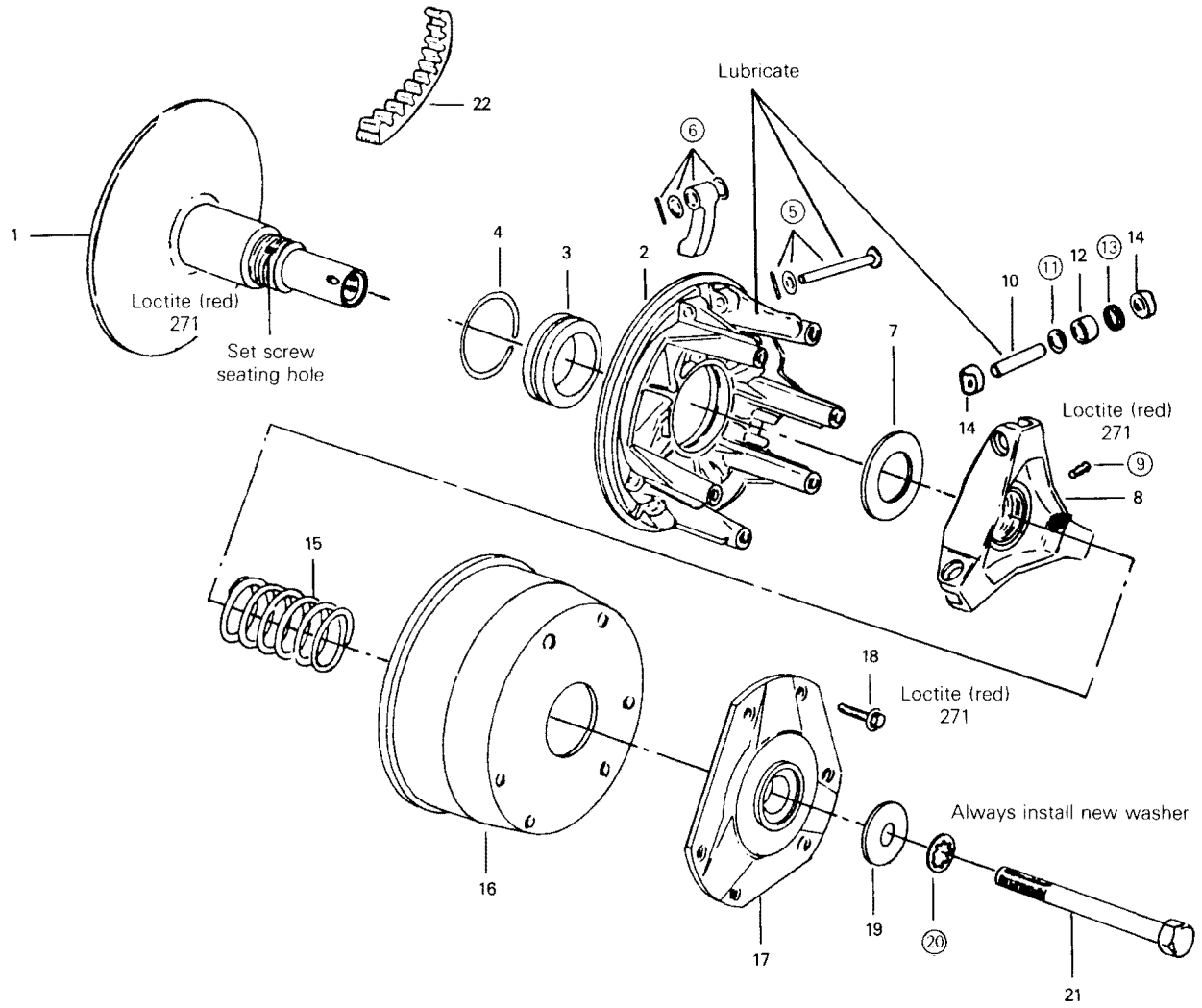

1. *Fixed face with post*
2. *Movable face with insert*
3. *Duralon insert*
4. *Locking ring*
5. *Pivot pin kit*
6. *Cam arm kit*
7. *Spacer*
8. *Spider*
9. *Allen set screw*
10. *Pin*
11. *Steel thrust washer*
12. *Roller*
13. *Fiber thrust washer*
14. *Wear button kit*
15. *Spring*
16. *Cover*
17. *Steel cover with insert*
18. *Hexagonal indented washer head bolt 1/4 - 20 x 3/4*
19. *Pilot washer*
20. *Internal tooth lockwasher*
21. *Hexagonal head cap screw 1/2 - 20 x 6 1/2 - GR.8*
22. *Drive belt*

◆ **WARNING: Drive pulley repairs that include any disassembly or assembly procedures must be performed by an authorized Bombardier dealer, or by a professional mechanic familiar with this type of pulley. Sub-component installation and assembly tolerances require strict adherence to procedures detailed.**

Drive Pulley Removal and Installation Procedure

Tools required:

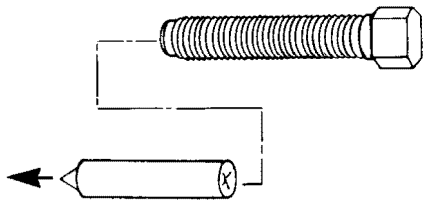

Clutch puller tool P/N 414 3813 00

Spider grunt tool P/N 414 3814 00

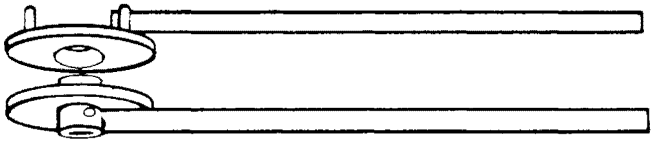

The grunt tool is approximately 66 mm (26") long.

Pulley Removal

With engine cold remove the spark plugs then bring the P.T.O. piston to T.D.C. (top dead center).

Rotate drive pulley 45° **clockwise** then insert enough starter rope into the cylinder to fill it completely.

▼ **CAUTION: Do not rotate the pulley more than 45° otherwise the rope may enter the engine port and cause serious engine damage.**

Remove the drive pulley retaining bolt.

Remove the drive pulley using puller P/N 414 3813 00 or equivalent.

Spring replacement procedure:

IMPORTANT: Before disassembling the drive pulley, all components should be marked for proper assembly.

○ **NOTE:** The drive pulley spring can be replaced without removing the drive pulley from the engine In both cases, the same procedure applies.

Remove the retaining plate by loosening the screws in an alternating sequence to prevent bending the plate.

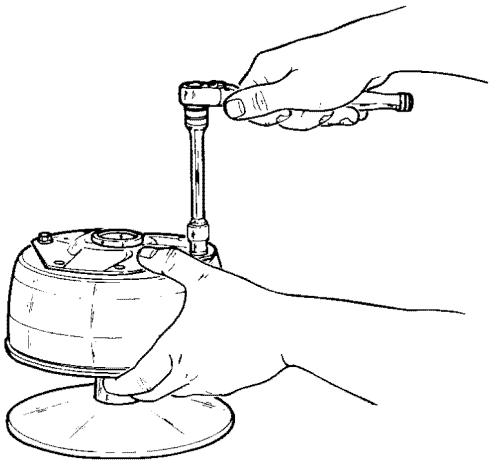

◆ **WARNING: Spring pressure can force assembly apart, therefore, it is emperative that the governor cup be held firmly during screw removal.**

▼ **CAUTION: Make sure you do not bend the retaining plate during removal or assembly.**

Should the cover be accidently bent, replace with a new one.

Remove the spring.

Install the new spring.

Reassemble making sure that the plate retaining screws are tighten in a sequence to avoid bending the plate.

○ **NOTE:** To further disassemble the drive pulley, the pulley ass'y should be completely removed from the engine.

◆ **WARNING: When disassembling the rest of the drive pulley, do not use a hammer to remove pins, etc. Any bending or fractures that are created while disassembling or reassembling the pulley can be the cause of serious damages when unit is operated at high R.P.M.**

Disassembly

After removing the spring and the dust cover, the spider can be removed.

Remove the set screw ⑨.

CAUTION: Use extreme care in removing the spider from the main post. Do not use a hammer or similar. Use only the grunt tool P/N 414 3814 00 or a similar device.

IMPORTANT: To ease disassembly, heat the spider to 80°-100°C (175°-212°F). This will expand the spider and bread the Loctite bond.

Install the grunt tool P/N 414 3814 00, one arm used to hold the ass'y fixed, the other arm used to loosen the threads.

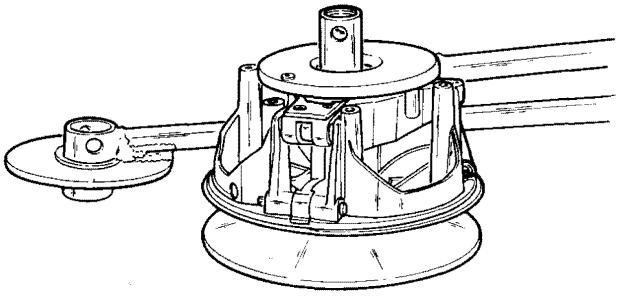

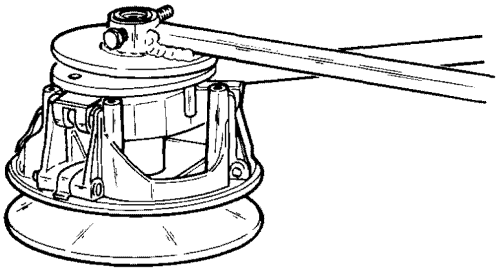

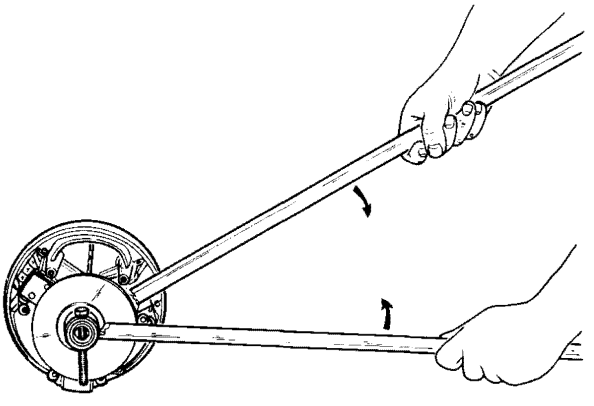

Reassembly

For reassembling, reverse the disassembly procedure, making sure that all parts are installed in their proper assembly order.

Apply "Loctite 271" red (high strength) on the spider main post threads, and on the threads of the set screw ⑨.

Tighten the spider (using the grunt tool) so that the set screw ⑨ will rest in the hole of the main post, using "Loctite 271" red (high strength).

CAUTION: Always install new roll pins on the cam arm retaining pins ⑤ and new washers on ⑤⑥⑪⑬. Replace all parts that show signs of wear or damage.

IMPORTANT: Lubricate all moving parts and friction surfaces with a dry lubricant P/N 414 3815 00.

Pulley Installation

CAUTION: Prior to installation clean the crankshaft taper with fine steel wool and acetone. Dry with a clean dry cloth.

Lock the crankshaft in position as explained in the removal procedure. Make sure the crankshaft is rotated 45° **counter-clockwise** from T.D.C. and that the cylinder is completely filled with starter rope.

CAUTION: Do not rotate the crankshaft more than 45°, otherwise the rope may enter the engine port and cause serious engine damage.

Install the drive pulley assembly on the crankshaft.

Install a new internal tooth lockwasher ⑳ on the retaining bolt.

Torque the pulley retaining bolt to 85 N•m (63 ft-lbs).

Remove the rope from the cylinder and reinstall the spark plugs.

Reinstall the drive belt.

Raise and block the rear of the vehicle off the ground.

Install the pulley guard and close the hood.

WARNING: Before starting the engine, make sure that the track is free off all particles which could be thrown out while track is rotating. Keep hands, tools, feet and clothing clear of track. Ensure no-one is standing in close proximity to the vehicle.

Start the engine and repeatedly apply the throttle and the brake.

Stop the engine and re-torque the pulley retaining bolt to 85 N•m (63 ft-bls).

Drive Chain Tension

The tension is correct when there is a deflection fo 6-8 mm (1/4 - 5/16") towards the exterior. Tension is adjusted by slightly tightening the tensioner sprocket against the chain and by locking it in position.

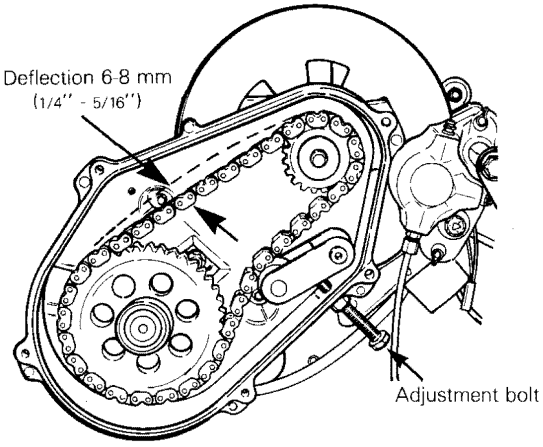

CAUTION: Do not overtighten the chain sprocket adjustment screw.

Track Condition

Lift rear of the vehicle and support it off the ground so that the track is free to turn. Rotate track by hand and visually inspect the condition, pay attention to cross links and rivets. **Immediately replace cracked cross links and loose or/and missing rivets.**

WARNING: Do not operate a snowmobile with a cut, torn or damaged track.

Track Adjustment

Raise the rear of vehicle and support with a mechanical stand. Allow slide to extend normally. A gap of 6-13 mm (1/4-1/2") should exist between slider shoe and cross links. If the track tension is too loose, the track will have a tendency to thump.

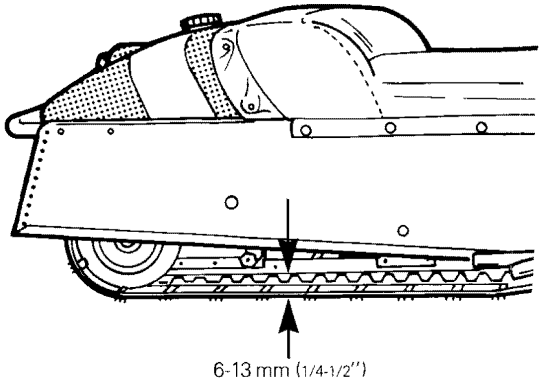

WARNING: Too much tension will result in power loss and excessive stresses on cross links and suspension components.

If necessary to adjust, loosen the idler wheel (retaining bolts) and slacken the adjuster bolt lock nuts.

Then, screw or unscrew the adjuster bolts to center the track.

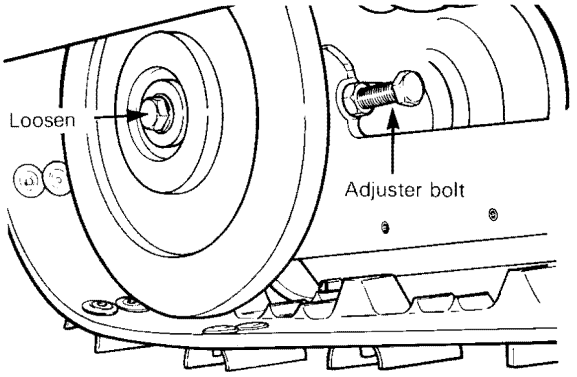

NOTE: Track tension and alignment are interrelated. Do not adjust one without the other.

Start the engine and accelerate slightly so that track turns **slowly.** Check that track is well centered and turns evenly. To correct, stop engine then tighten the adjuster bolt on side where track is closest to the frame. Recheck alignment.

Retighten the adjuster bolt lock nut, the idler wheel retaining bolts and recheck alignment.

WARNING: Before checking track aligment, ensure that the track is free of all particles which could be thrown out while track is rotating. Keep hands, tools, feet and clothing clear of track. Ensure no-one is standing in close proximity to the vehicle.

Track Cleating

Track position:

The side of the track having only outside guides must be on MAG side.

Track spiking

- Hard iced race track:
  - ■ Kicker
  - × Steel spike

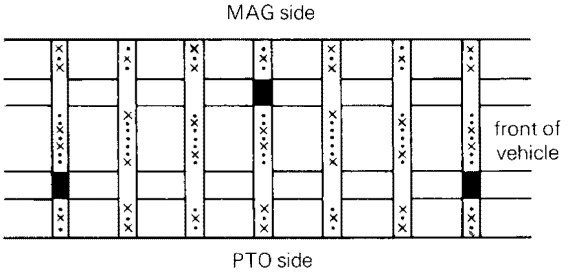

- Soft iced race track: replace steel spikes for carbide tip spikes or triangular spikes.

Suspension Condition

Visually inspect suspension springs. Replace any weak or broken spring. Inspect shoe condition of slide suspension and replace as necessary.

Front Suspension Adjustment

Prior to any suspension and/or steering adjustment always perform the following adjustments in the described sequence.

1. Camber adjustment
2. Handlebar adjustment
3. Toe out adjustment

Proceed as follows to adjust:

- Place the vehicle on an horizontal surface.
- Lift the front of the vehicle (using two wooden blocks installed under the bottom plate) in order to obtain a gap of 6-13 mm (1/4-1/2") under each ski when the front suspension is totally extended.

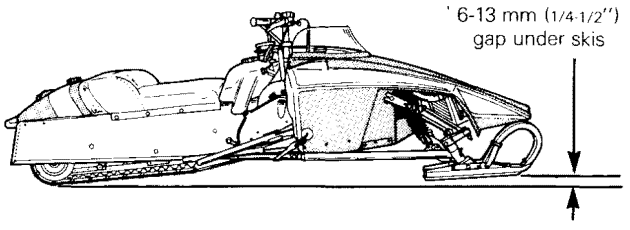

NOTE: This adjustment must be performed with the hood removed.

Camber adjustment

Ensure that the front suspension is totally extended and that the skis are straight.

- With the angle finder and a straight edge (laid flat on the ski leg top portion) adjust the camber as recommended.

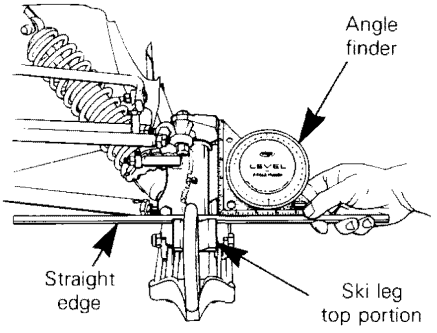

Camber L.H. (sitting on vehicle) 0°
Camber R.H. 2° - 5° negative

NOTE: The camber is the tilting of the ski leg/ski from the vertical. To obtain a negative camber the ski leg/ski must be tilt inward, so that the ski legs are closer together at the top than at the bottom. The amount of tilt is measured in degrees from the vertical. The measurement is called camber angle.

To adjust the camber:

Loosen the lock nuts of the upper and lower front arms. Turn the arms manually until recommended camber angle is reached. Firmly retighten lock nuts.

NOTE: Always ensure to maintain the ski stance of 105.4 cm (41 1/2") while performing this adjustment.

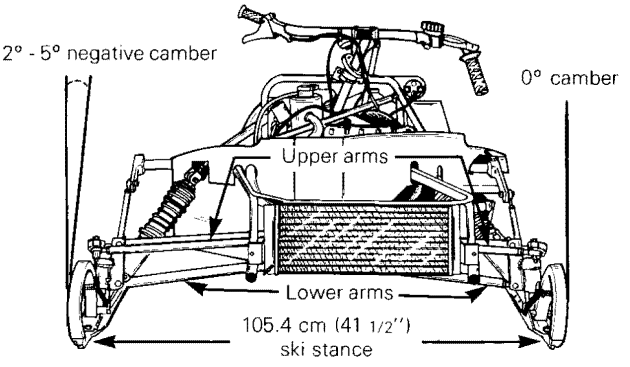

Lower the vehicle at the floor and work the suspension up and down so that all the suspension components have a chance to move.

- It is recommended, to recheck camber adjustment through the whole procedure.
- Recheck all bolts and locking nuts and ensure that the ski stance remains at 105.4 cm (41 1/2") from center to center of skis.

Stabilizer bar adjustment

The stabilizer bar has three (3) interchangeable attachment positions to suit the drivers preference.

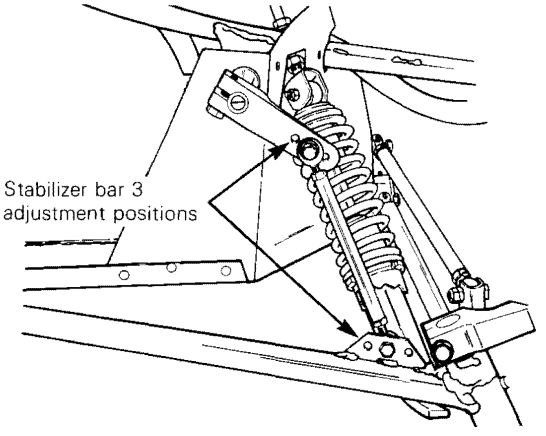

1. Front - light
2. Center - medium
3. Rear - firm

The stabilizer bar should always be free of any tension while performing suspension adjustment or selecting one of the three (3) attachment positions. This is obtained by varying the length of the retaining tie rods.

Weight transfer adjustment

NOTE: This adjustment is only recommended for flat track racing.

Weight transfer adjustment is possible by raising the right hand side of the frame in order to keep the machine horizontal while cornering on a flat track.

The right hand side shock absorber top retaining screw is adjustable.

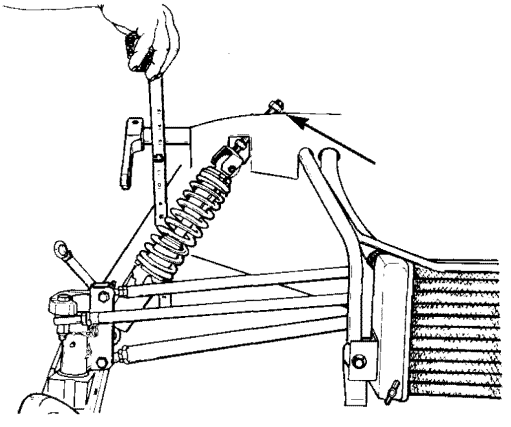

IMPORTANT: The R.H. frame height must not exceed 25 mm (1") above the left hand side.

To adjust proceed as follows:

With the vehicle on the ground

- Disconnect the R.H. stabilizer bar tie rod from arm.
- Unlock the R.H. shock absorber top retaining nut.
- Screw or unscrew the lower nut to adjust the frame height to the rider's preference.

Measure the distance from the ground to the top of the stabilizer bar arm on both sides to obtain the desired height.

After the desired height is obtained re-install the stabilizer bar tie rod bolt and lock the shock absorber top lock nut.

Remember, the stabilizer bar should always be free of any tension when performing adjustment. The length of the retaining tie rod can be altered.

NOTE: When racing on a banked track it is recommended to keep the frame height equal on both sides.

Shock absorber adjustment

- Ski shock absorbers are adjustble to suit a driver's particular preference. This adjustment includes, a damping action adjustment as well as spring preloading adjustment.

Damping action adjustment

The damping action has three possible variations, regular, firm or extrafirm.

Remove the shock absorber from the vehicle and install the lower retaining eye in a vise. Unscrew the upper aluminum stopper on the shaft.

Using two (2) screwdrivers, remove the shock spring collar, the spring, and the stopper.

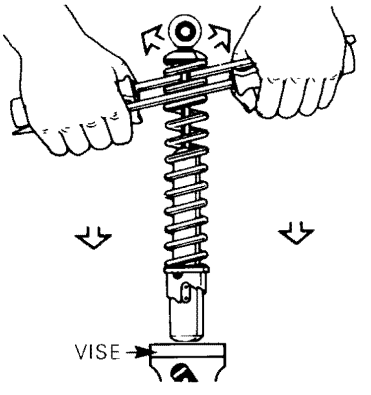

Fully collapse the damper rod, ensure to align the top collar mark with the identification mark on the shock body.

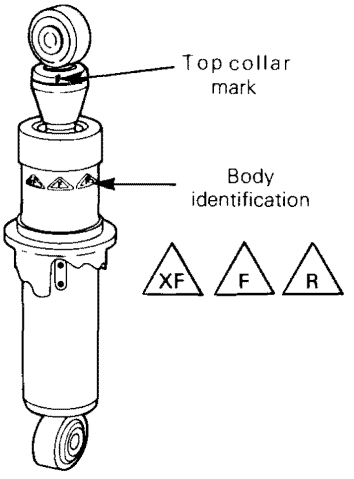

To locate the existing adjustment, turn the damper rod collar mark slowly over the body identification marks until engagement can be felt then turn in required direction to attain desired position.

Preloading

– To adjust the spring preload, the cam collar can be turned clockwise to increase, counter-clockwise to decrease. A high spring preload will increase the vehicle carrying capacity.

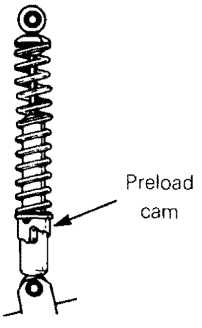

Steering Mechanism

Inspect steering mechanism for tightness of components (steering arms, tie rods, ball joints, ski coupler bolts, etc.). If necessary, replace or retighten. Check condition of skis and ski runners. Replace if worn.

Steering Adjustment

Prior to any suspension and/or steering adjustment always perform the following adjustments in the decribed sequence.

1. Camber adjustment
2. Handlebar adjustment
3. Toe out adjustment

Handlebar adjustment

Disassemble the steering arm ball joint (located at front of track tunnel.)

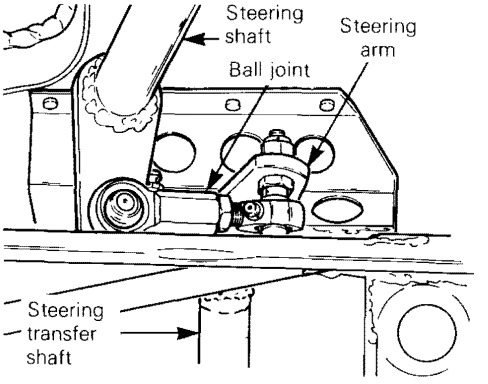

Set the handlebar to form a 90° angle with the frame and position the steering transfer shaft attachment bracket at a vertical position.

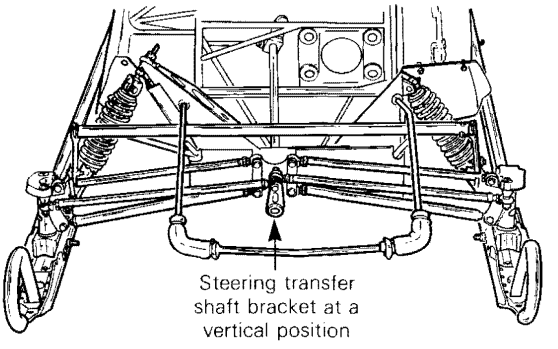

◆ **WARNING: Always ensure that the steering transfer shaft attachment brackets are vertical when the steering arm is positioned at a 20° angle with the attachment brackets.**

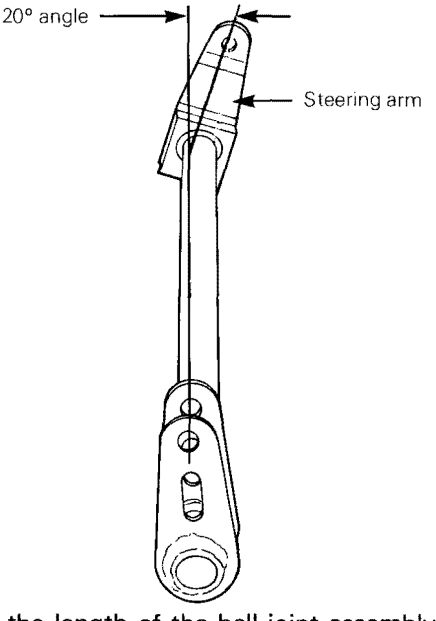

Re-adjust the length of the ball joint assembly and reinstall to the steering.

◆ WARNING: The handlebar to steering transfer shaft ball joint assembly length must not exceed 76 mm (3") center to center of ball joints.

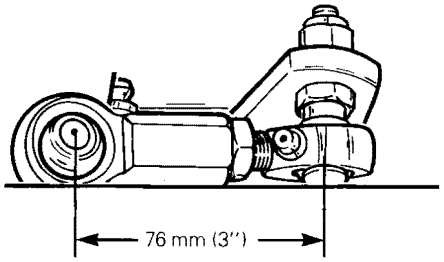

Toe out adjustment

Skis should have a toe out of 3.2 mm (1/8") minimum to 4.8 mm (3/16") maximum. To check, measure distance between skis at front (behind ski handle loop) and rear of outside edge.

To adjust:

Ensure that the steering transfer shaft ball joint attachment brackets are vertical and that the skis are pointed directly forward.

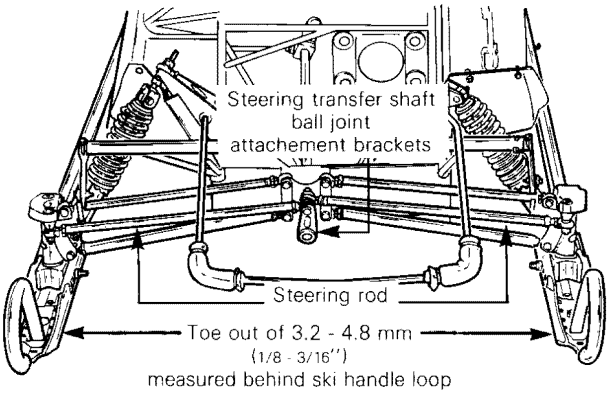

Loosen the lock nuts of each tie rod. Equally turn the tie rods manually until skis are properly aligned. Firmly retighten lock nuts.

◆ WARNING: The ball joint socket must run parallel with the steering arm. The socket must be restrained when tightening the tie rod end lock nuts. The handlebar should form a 90° angle with the frame, when the skis are pointed forward.

Rear Suspension Adjustment

Two different adjustments are possible:
- Preload adjustment
- Front limiter adjustment

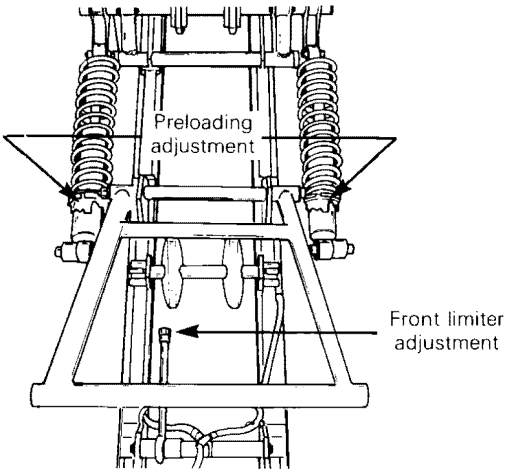

Preload Adjustment

- To adjust the spring preload, the cam collar can be turned clockwise to increase, counter-clockwise to decrease. A high spring preload will increase the vehicle carrying capacity.

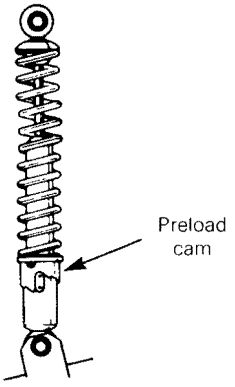

Front limiter adjustment

- Place the vehicle on an horizontal surface.
- Raise the front of the vehicle (using two wooden blocks installed under the bottom plate) in order to obtain a gap of 6-13 mm (1/4-1/2") under each ski when the front suspension is totally extended.

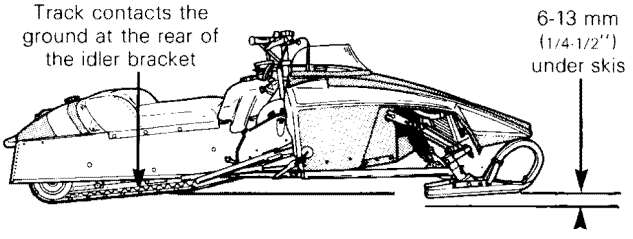

- Adjust the front limiter until the front portion of the track (at the rear of the idler bracket) comes in contact with the ground.

Cooling System

By lifting the radiator cap lever check that cap pressurizes the system. If not,install a new 14 lb pressure radiator cap.

Using an hydrometer check that the anti-freeze solution is strong enough for the temperature in which the vehicle is operated.

If coolant temperature is above 80°C (180°F) check that the radiator is not obstructed with grim or foreign material.

To drain the cooling system

◆ **WARNING: Never drain the cooling system when hot and under pressure. Serious burns from coolant may occur.**

Release the pressure in the system by lifting the lever incorporated on the pressure cap.

Remove the radiator pressure cap.

◆ **WARNING: Before removing the cap, always release the pressure by lifting the lever incorporated on the cap, loss of fluid and the possibility of severe burns could occur.**

Drain the cooling system by disconnecting the by-pass hose from the engine head elbow, then block off the elbow and open the radiator drain valve. (Located on the lower portion of the radiator) then lower the bypass hose to drain engine.

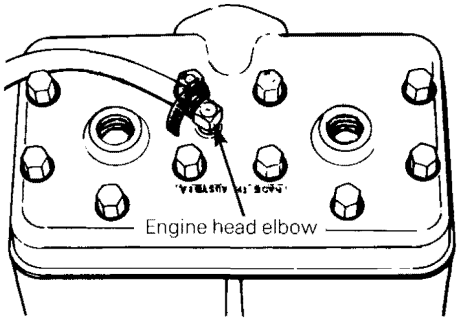

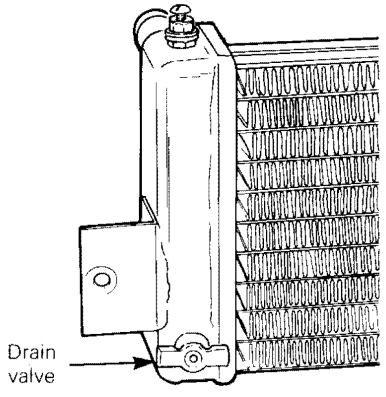

On the system has been drained, unblock the elbow.

○ NOTE: To completely drain the system the elbow has to be blocked, otherwise no syphoning effect will be produced and a certain quantity of liquid will remain in the system.

▼ **CAUTION: To prevent rust formation in the cooling system, always replenish ghe system with the recommended solution. (60% antifreeze 40% water).**

To refill the cooling system

Close the radiator drain valve, open the bleeder screw, pour in the liquid until it reaches the bleeder, close the bleeder screw.

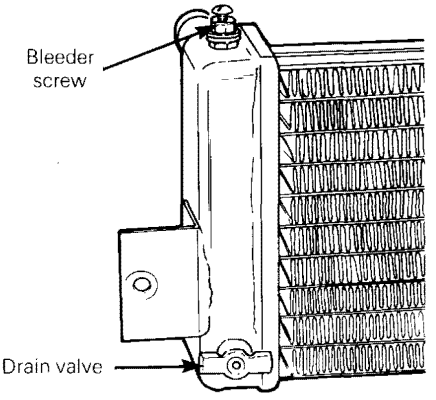

Position the disconnected end of the by-pass hose higher than the engine head, then pour in the liquid until it reaches the elbow fitting on the engine head. Reconnect the hose.

Continue to slowly pour the liquid in the tank until the coolant level reaches the lower portion of the upper return hose.

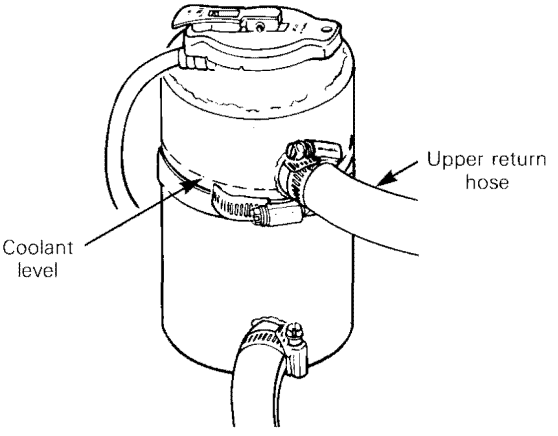

Re-install tank cap and start engine; let engine run until it reaches its operating temperature.

◆ **WARNING: Before removing the radiator pressure cap always release the pressure by filting the lever incorporated on the cap, loss of fluid and the possibility of severe burns could occur.**

Engine Head Nuts

After the first 5 hours of operation, check that engine head nuts are tight and equally torqued to 22 N•m (16 ft-lbs) when cold.

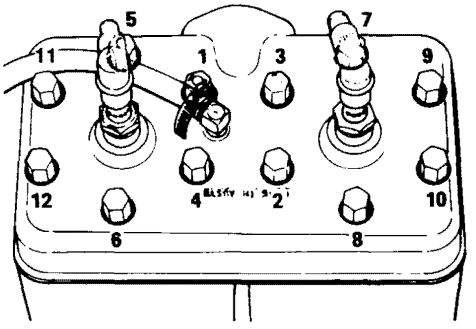

Engine Mount Nuts

Check engine mount nuts for tightness. Retighten if necessary.

Exhaust System

The engine / exhaust system parts are vital toward efficient muffler function. Check all attachments. Replace springs and / or tighten if necessary.

CAUTION: Do not operate vehicle with exhaust disconnected otherwise serious engine damage will occur.

Spark Plugs

Disconnect spark plug wires and remove spark plugs. Check condition of plugs.

- A brownish tip reflects ideal condition (correct carburetor adjustment, spark plug heat range, etc.).
- A black insulator tip indicates fouling caused by: carburetor idle speed mixture and / or high speed mixture too rich, incorrect fuel mixing ratio, wrong type of spark plug (heat range), or excessive idling.
- A light grey insulator tip indicates a lean mixture caused by: carburetor high speed mixture adjusted too lean, wrong spark plug heat range, incorrect fuel mixture ratio, or a leaking seal or gasket.

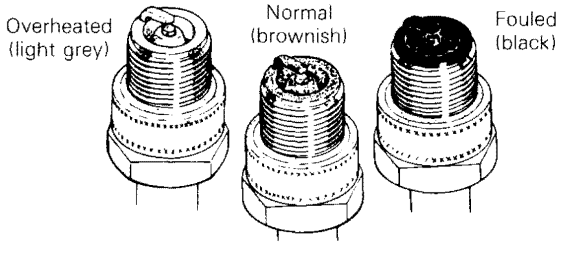

Check spark plug gap unsing a wire feeler gauge. Gap must be 0.40 mm (.016"). Reinstall plugs and connect wires. Correct spark plugs are Bosch W 340 S2S or equivalent.

Carburetor Adjustment

The carburetor adjustments are: Air Screw Adjustment, Throttle Slide Adjustment and Idle Speed Adjustment.

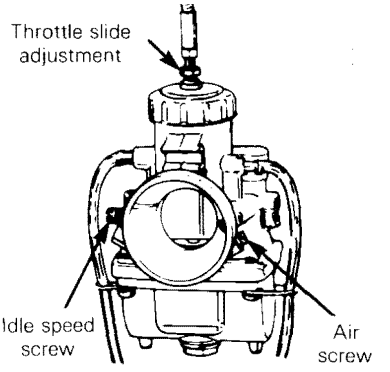

A) Air screw adjustment

Completely close the air screw (until a slight seating resistance is felt), then back off screw to specification.

B) Throttle slide adjustment

WARNING: Ensure the engine is turned OFF, prior to the throttle slide adjustment.

With the throttle cable adjuster jam nut unlocked, press the throttle lever against the handle grip. Unscrew the cable adjuster manually to obrain maximum carburetor slide opening. Check with your finger if the carburetor slide is well seated against the carburetor top portion). Then, screw the cable adjuster in two turns in order to nullify any possible tension on the throttle cable then, tighten the cable adjuster jam nut.

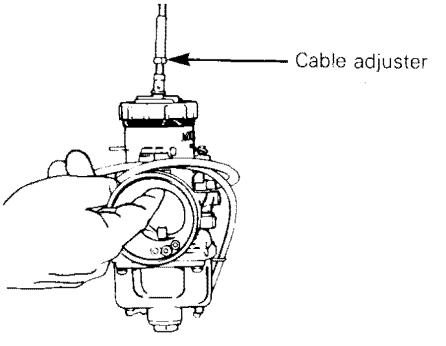

WARNING: It is important that the throttle slide adjustment be performed to ensure proper functioning of the throttle mechanism.

C) Idle speed adjustment

Turn idle speed screw clockwise until it contacts the throttle slide then continue turning two (W) additional turns. This will provide a preliminary idle speed setting. Start engine and allow it to warm then adjust idle speed to 3000-3500 RPM by turning idle speed screw clockwise or counter-clockwise.

CAUTION: Do not attempt to set the idle speed by using the air screw. Severe engine damage can occur.

Ignition Timing Procedure

Foreword

On models equipped with a Bosch C.D. ignition system, plug firing is initiated by an electrical pulse. This pulse is released when a metal projection on the flywheel hub rotates near the trigger coil. Therefore, timing must be performed while the engine is running.

A stroboscopic timing light such as Sun PTL 45, Snap-On MT 215B, Bosch EFAW 169A, or a suitable equivalent, plus a 12 volt battery are needed.

Ignition timing

Timing procedure for this engine type is composed of **four main phases,** all being equally important.

1. **Position of the armature plate.**
2. **Position of the timing marks on magneto ring.**
3. **Air gap between trigger coil and magneto ring.**
4. **Timing verification using a stroboscopic timing light.**

1. To obtain best generator coil performance, position the armature plate on the crankcase with the retaining cap screws in the middle of the plate slots.

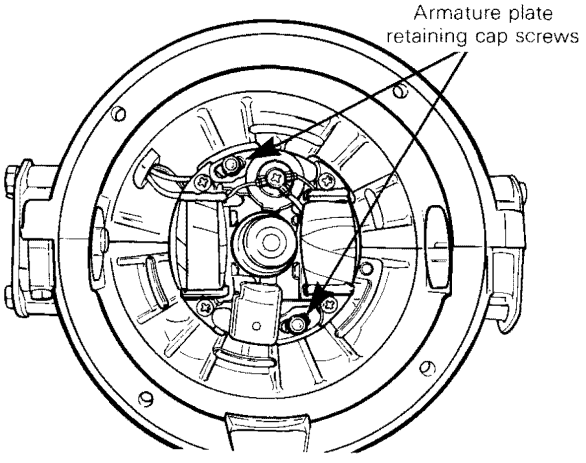

CAUTION: When asembling magneto ring on crankshaft, clean crankshaft extension (cone) and threads. Apply "Loctite 242" (no. 413 7025) on cone and threads. Torque bolt to 80 N•m (60 ft-lbs).

2. Check the position of the timing marks (for each cylinder) on magneto ring: repunch if necessary.

   With the piston positioned at 3.41 mm (.134") B.T.D.C., magneto ring mark should align with central mark on crankcase (around timing hole).

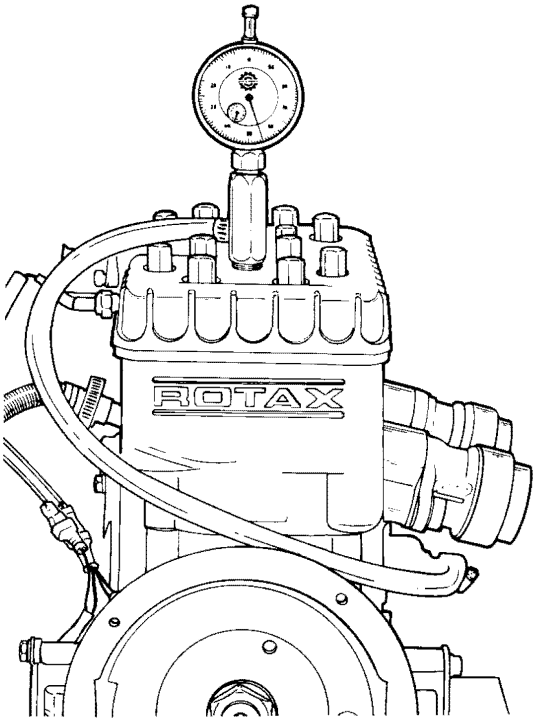

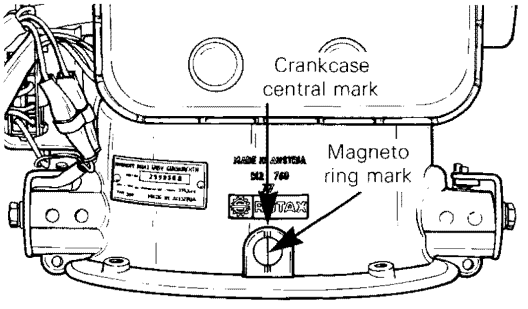

3. Check air gap between magneto ring and trigger coil. The gap should be 0.6 to 0.9 mm (.023" to .035").

   NOTE: It is recommended to use a brass feeler gage.

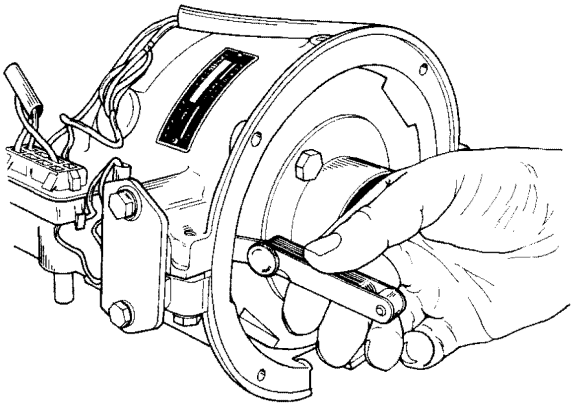

4. Check timing using a stroboscopic timing light (on each cylinder).

   WARNING: Place ski tips against the wall, raise rear of vehicle so the track is not in contact with the ground and place it on a stand equipped with a protector. Make sure nobody passes behind the vehicle during timing procedure.

   Magneto ring mark and crankcase central mark should align at 5000 R.P.M.

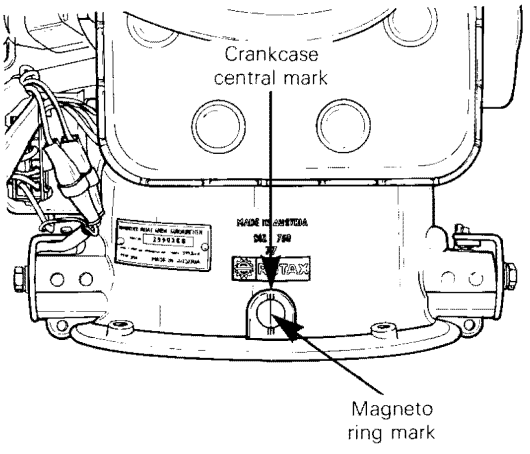

If necessary to adjust: unscrew slightly the two (2) screws holding trigger coil bracket, then move bracket up or down.

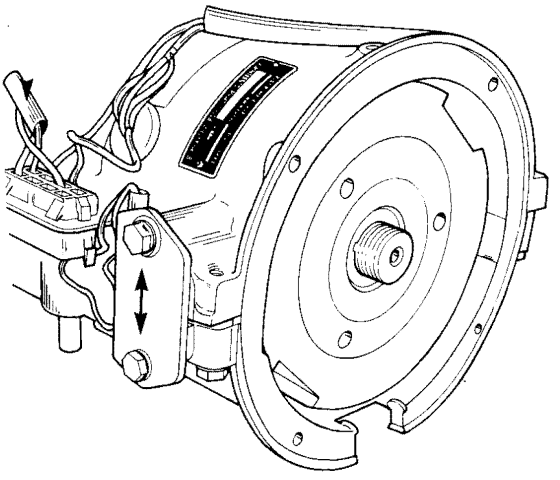

If correct timing is impossible with trigger coil bracket travel, stop engine, remove bracket from crankcase and relocate the trigger coil on its bracket.

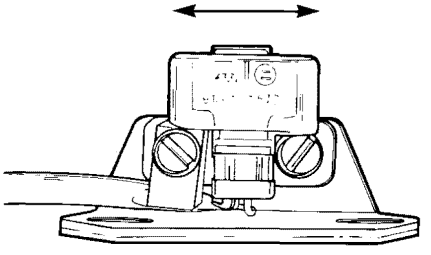

Vehicle General Inspection

Check electrical wiring and components, retighten loose connections. Check for stripped wires or damaged insulation. Thoroughly inspect the vehicle and tighten loose bolts, nuts and linkage. Inspect skis and ski runners for wear.

Tail Light Bulb

The taillight bulb must always be on when the engine is running. If the taillight bulb is burnt, expose bulb by removing red plastic lens.

TROUBLE SHOOTING GUIDE

SYMPTOMS	CAUSE
Engine fails to start or does not start easily	No fuel to carburetor a) clogged fuel filter b) clogged fuel line c) faulty carburetor float needle Insufficient compression a) crankcase compression leaks at seal b) crankcase compression leaks at crankcase mating surfaces c) rotary valve cover leaks d) worn or stuck piston ring e) improper timing of rotaty valve No spark at plug a) fouled or wet plug b) faulty CD box c) faulty generating coil d) open or short circuit in armature plate e) faulty spark plug protector f) shorted tether switch
Good spark but engine runs on one (1) cylinder	Bad CD box Faulty spark plug Seized piston
Engine operation is erratic at low speed	Crankshaft seals leak Carburetor air screw is improperly adjusted Incorrect float level Excessive spark plug gap or dirty electrodes Incorrect ignition timing Faulty CD box Short circuit in armature plate
Engine stalls frequently	Fouled plug Restriction in the gas cap vent Clogged fuel lines Clogged carburetor jets Crankcase compression leaks Rubber flanges or rotary valve cover leaks
No acceleration	High speed jet too lean or obstructed
Idles well but dies down when put to full throttle	Float level too low Choke partly closed Fuel line or fuel filter cartridge obstructed Engine improperly timed

SYMPTOMS	CAUSE
Engine does not have sufficient power	Worn cylinder and worn or stuck piston rings Incorrect ignition timing Incorrect spark plug gap Clogged carburetor jets Incorrect float height
Vibrates excessively or runs rough and smokes	Idle or high speed mixture adjustment too rich Engine mount loose Water in gasoline
Engine overheats	Excessive carbon deposit on cylinder head Lean fuel / air mixture Incorrect ignition timing Spark plug range too hot Coolant level to low Coolant pump inoperative Air pocket in cooling system
Engine operation is erratic at high speed	Spark plugs are improperly gapped, dirty or faulty Crankcase compression leaks Incorrect carburetor float level Broken or cracked tuned exhaust Short circuit in armature plate Faulty CD box
High speed back-firing	Lean carburetor adjustment Carbon formation on spark plug Crankshaft seal leaks Loose armature plate
Ignition fails to spark	Fouled spark plug or faulty Defective CD box Short circuit in armature plate Improper ground of ignition system
Spark plug electrodes are fouled	Rich carburetion Incorrect gas / oil ratio Incorrect spark plug heat range
Spark plug electrodes are burned	Incorrect heat range Overheating engine Incorrect ignition timing Loose spark plug Lean mixture

SYMPTONS	CAUSE
Uneven belt wear	Improper alignment Loose engine mount Rough or scratched pulley surfaces
Belt turns over	Pulley misalignment Engine over-revs. Incorrect gear ratio
Drive pulley fails to fully disengage	Weak or broken spring Pulleys misaligned Sliding half sticking
Engagement speed too low	Weak or broken spring Wrong belt installed Incorrect counterweights installed
Engagement speed too high	Incorrect spring Roller(s) worn Incorrect counterweights installed
Erratic engagement	Roller(s) worn Stretched, deformed or broken spring
Creeping at idle	Too great a center to center distance between pulleys Incorrect drive belt Pulleys misaligned Incorrect spring
Poor top speed	Sliding half binds Incorrect driven pulley spring tension
Engine loads	Weak or broken driven pulley spring

STORAGE

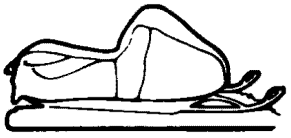

IMPORTANT: It is during summer, or when a vehicle is not in use for any length of time that proper storage is a necessity. **Storage of the snowmobile during long periods of inactivity consists of checking and replacing missing broken or worn parts; proper lubrication and treatments to insure that parts do not become rusted;** cleaning items such as carburetor of oil mixtures, to prevent gum varnish formation within the carburetor; and in general, preparing the vehicle so that when the time comes to use the snowmobile again it will start and be in top condition.

◆ **WARNING: Only perform such procedures as detailed in this manual. It is recommended that dealer assistance be periodically obtained on other components / systems not covered in this manual. Unless otherwise specified, engine should be turned OFF for all lubrication and maintenance procedures.**

Cooling System

During prolonged storage it is recommended to completely drain the cooling system and refill with a new solution of coolant.

To drain the cooling system

◆ **WARNING: Never drain the cooling system when hot and under pressure. As serious burns from coolant may occur.**

Release the pressure in the system by lifting the lever incorporated on the pressure cap.

Remove the radiator pressure cap.

◆ **WARNING: Before removing the cap clways release the pressure by lifting the lever incorporated on the cap, loss of fluid and the possibility of severe burns could occur.**

Drain the cooling system by disconnecting the by-pass hose from the engine head elbow, then block off the elbow and open the radiator drain valve. (Located on the lower portion of the radiator) then lower the by-pass hose to drain engine.

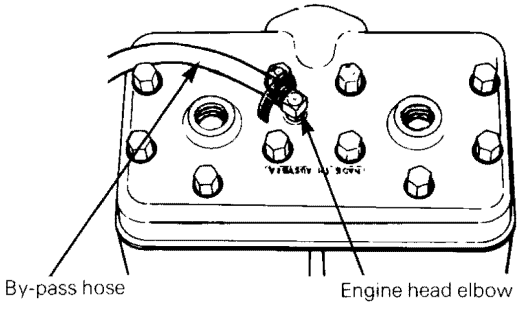

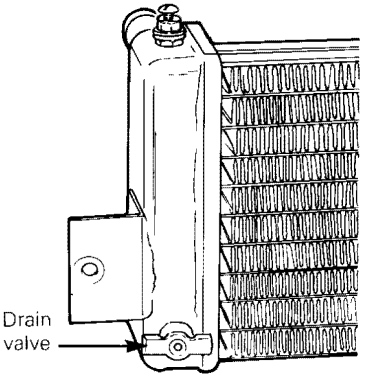

Once the system has been drained, unblock the elbow.

○ NOTE: To completely drain the system the elbow has to be blocked, otherwise no syphoning effect will be produced and a certain quantity of liquid will remain in the system.

▼ **CAUTION: To prevent rust formation in the cooling system, always replenish the system with the recommended solution. (60% antifreeze 40% water).**

To refill the cooling system

Close the radiator drain valve, open the bleeder screw, pour in the liquid until it reaches the bleeder. Close the bleeder screw.

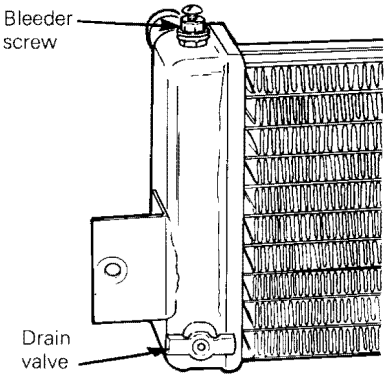

Position the disconnected end of the by-pass hose higher than the engine head, then pour in the liquid until it reaches the elbow fitting on the engine head. Reconnect the hose.

Continue to slowly pour the liquid in the tank until the coolant level reaches the lower protion of the upper return hose.

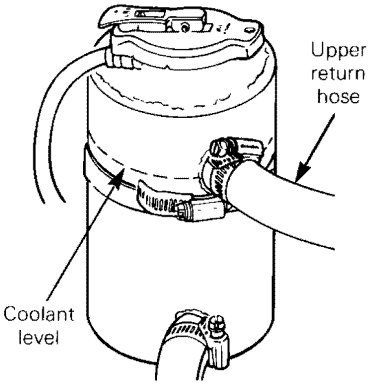

Re-install tank cap and start engine; let engine run until it reaches its operating temperature.

Stop engine and check coolant level; refill as necessary.

WARNING: Before removing the radiator pressure cap, always release the pressure by lifting the lever incorporated on the cap, loss of fluid and the possibility of severe burns could occur.

Track

Inspect track for cuts, loose or broken cross links and rivets. Make any necessary replacement. Lift rear of vehicle until track is clear of ground then support with brace or trestle. The snowmobile should be stored in such a way that track does not stay in contact with cement floor or bare ground.

NOTE: The track should be rotated periodically, (every 40 days). Do not release track tension.)

CAUTION: To prevent track damage, temperature in the storage area must not exceed 38°C (100°F).

Suspension

Remove any grime or rust. Check slider shoe condition. Replace as necessary.

Skis

Wash or brush all grime or rust accumulation from skis. Grease ski legs at grease fittings. Check condition of skis and ski runners. Replace if worn.

Slider Shoe Lubricant Tank

Check hoses for signs of leakage. Also check tightness of fittings on slide, check valve and tank.

Fuel Tank

Remove cap then using a syphon, remove gasoline from tank.

WARNING: Gasoline is flammable and explosive under certain conditions. Always perform procedures in a well ventilated area. Do not smoke or allow open flames or sparks in the vicinity.

Carburetors

The carburetors must be dried out completely to prevent gum formation during the storage period.

Assure that the inlet line is disconnected. Remove drain plug of the float chamber of each carburetor. Drain carburetors.

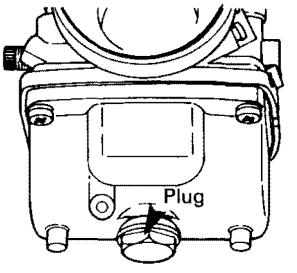

Reinstall plug and connect fuel line.

Cylinder Lubrication

Engine internal parts must be lubricated to protect cylinder walls from possible rust formation during the storage period.

NOTE: This operation should be repeated every 40 days during storage.

Remove spark plugs. Operate rewind starter to bring piston at top position. Pour the equivalent of one spoonful of oil into spark plug hole.

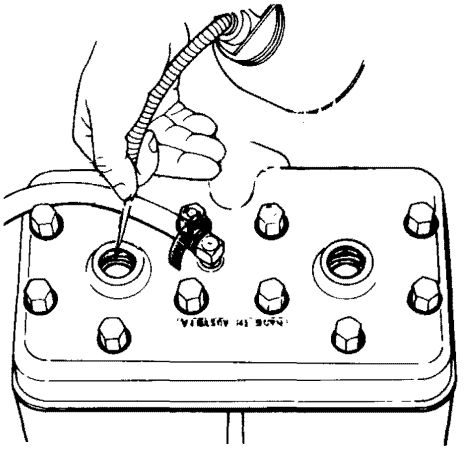

Slowly crank engine several times using manual starter. Repeat above steps for other cylinder. Install spark plugs.

Drive Pulley

Inspection, cleaning and lubrication should be performed at the end of each racing season.

All the moving parts and friction surfaces must be lubricated with a dry lubricant.

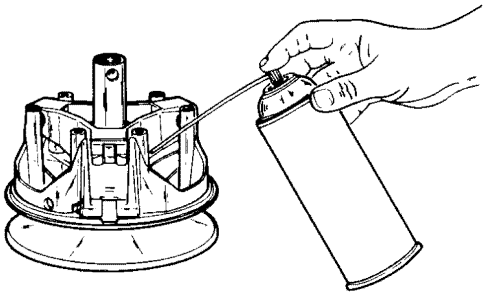

Chaincase

Drain the chaincase completely and refill to proper level using fresh chaincase oil. To drain, remove chaincase cover.

Controls

Lubricate steering mechanism. Inspect components for tightness, (ski coupler bolts, steering arm locking bolts, tie rods, ball joints, etc.). Tighten if necessary.

◆ **WARNING: Do not lubricate throttle cable housing.**

Coat electrical connections and switches with a greaseless metal protector. If unavailable, use petroleum jelly.

Chassis

Clean the vehicle thoroughly, removing all dirt and grease accumulation.

▼ **CAUTION: Plastic alloy components such as fuel tank, etc., can be cleaned using mild detergents or isopropyl alcohol. Do not use strong soaps, degreasing solvents, abrasive cleaners, paint thinners, etc.**

Inspect hood and repair damage. Repair kits are available at your authorized dealer. Clean frame (Use only "Aluminum cleaner" and follow instructions on container).

Touch up metal spots where paint has been scratched off. Spray all bare metal parts of vehicle with metal protector. Wax the hood for better protection.

○ **NOTE:** Apply wax on glossy finish of hood only. Protect the vehicle with a cover to prevent dust accumulation during storage.

▼ **CAUTION: If for some reason the snowmobile has to the stored outside it is necessary to cover it with an opaque tarpaulin. This caution will prevent the sun rays affecting the plastic components and the vehicle finish.**

General Inspection

Check electrical wiring and components, retighten loose connections. Check for stripped wires or damaged insulation.

Thoroughly inspect the vehicle and tighten loose bolts, nuts and likage.

○ **NOTE:** Leave drive belt off pulleys for the entire storage period.

GEAR RATIO CHART

R.P.M.	TOP GEAR	RATIO 1 TO 1
9200	15 T	77.7 M.P.H.
9200	16 T	82.9 M.P.H.
9200	17 T	88.1 M.P.H.
9200	18 T	93.3 M.P.H.
9200	19 T	98.5 M.P.H.
9200	20 T	103.6 M.P.H.
9200	21 T	108.8 M.P.H.
9200	22 T	114.0 M.P.H.

Calculation example

To find the vehicle top speed with

- bottom gear: 40 teeth
- top gear : 19 teeth
- R.P.M. : 9200
- correction factor: .022537

Ex.: $\frac{19 \times 9200 \times .022537}{40} = 98.5$ M.P.H.

Top speed is 98.5 M.P.H.

SPECIFICATIONS

ENGINE	Type	354
	No. of cylinders	2
	Bore	59.5 mm
	Stroke	61 mm
	Displacement	339.2 cm^3
	Compression ratio ± .5	15.5:1
	Squish area	1.2 mm (.047")
	Squish angle	14°
	Rotary valve	
	opening B.T.D.C.	137°
	closing A.T.D.C.	65°
	Cylinder port timing:	
	Transfer port	14.4 mm 65°
	Auxiliary boost port	16.5 mm 69.8°
	Exhaust port	31.0 mm 98.2°
	Auxiliary exhaust port	29.5 mm 95.5°
	Maximum R.P.M.	9200
	Piston ring type	Keystone "L" with moly filling
	Piston to wall clearance (min)	0.13 mm (.0051")
	Ring end gap	0.15 p 0.30 mm (.006 - .012")
	Cylinder head nut torque	22 N•m (16 ft-bls)
	Crankcase bolt torque	21 N•m (15 ft-lbs)
	Cylinder nut torque	22 N•m (16 ft-lbs)
	Engine support torque	35 N•m (24 ft-lbs)
	Mag. wheel torque	80 N•m (60 ft-lbs)

CARBURATION	Carburetor type	Mikuni 2 X VM40
	Carburetor part number	403 1045 00
	Main jet ** sea level	620 mag 580 PDM
	Needle jet	224BB5
	Needle indentification	7DH2-3
	Needle setting from top	3rd groove
	Idle jet	40
	Throttle slide cut away	2.5 mm
	Air screw adjustment	1 1/2 turn ± 1/8
	Float level	Float arm parallel with carburetor body edge
	By-pass hole diameter	1.4 mm
	Idle outlet diameter	0.7 mm
	Valve seat diameter	1.5 mm
	Starter jet diameter	1.5 mm
	Idling R.P.M.	3000 - 3500
	Gasoline	Aviation type light blue 100 LL octane Light green 100 to 130 octane
	Oil	Blizzard snowmobile oil
	Gas/oil ratio	20/1
** The main jets are identifical during the break-in period. It is necessary to change PTO jet after that period according to dome color.		
CAPACITIES	Fuel tank	
	— S.I.	9 liters
	— Imp. gals	2 gals
	— U.S. gals	2.4 gals
	Rotary valve	125 ml (4.3 oz)
	Cooling system	2500 ml (88 oz)
	Chaincase	200 ml (7 oz)
	Track lubricant tank	2190 ml (77 oz)

POWER TRAIN	Gear ratio	19/40
	Drive pulley type	Comet high performance
	Drive pulley retaining bolt torque	85 N•m (63 ft-lbs)
	Pressure lever identification	Comet A-3
	Spring length/number/color/rate	104.1 mm (4.100") 414 3768 00 blue 75 in/lb
	optional	99.5 mm (3.920") 414 3783 00 yellow 85 in/lb
	optional	110.5 mm (4.350") 414 3784 00 silver 65 in/lb
	Clutch engagement R.P.M.	5800 to 6000
	Driven pulley spring preload	13 lbs
	Driven pulley cam pitch lead	10-9-8
	Pulley center to center distance	26.8 cm (10 9/16")
	Offset dimension (nominal X & Y)	34.1 mm (1 1//32")
	Belt number: Bomb P/N	414 3758 00
	Dayco Max. P/N	1103 R 340
	Track type	Internal drive with reveted steel cleats
	Track length	259 cm (102")
	Track width	38 cm (15")
	Track tension (gap)	6-13 mm (1/4 - 1/2")
	Drive chain type	Silent chain
	Drive chain pitch	3/8"

* Driven pulley cam available with

Pitch lead	P/N
8-7-6	504 1181 00
8 straight	504 1178 00

NOTE: To obtain maximum output horse power, pulley calibration must keep maximum engine R.P.M. to 9200.

SUSPENSION	Type	TORQUE REACTION
	Shock spring rate:	
	Front - R.H.	145 lbs/in
	Front - L.H.	135 lbs/in
	Rear	25 lbs/in
	Stabilizer bar diameter	3/4"
	Stabilizer bar adjustment	Forward - light Reward - firm
STEERING	Caster - L.H.	31° fixed
	- R.H.	31° fixed
	Camber - L.H.	0° adjustable
	- R.H.	2° - 5° (neg.) adjustable
	Handle bar angle	30°
	Steering/column torque	40 N•m (30 ft-lbs)
	Steering arm/ski leg torque	40 N•m (30 ft-lbs)
SKIS	Alignment toe out	1/8" - 3/16"
	Runner type	Carbide
	Stance (center to center)	41 1/2"
	Stance (overall)	45"
CHASSIS	Frame material	Aluminum
	Cab meterial	Fegerglass
	Overall length	243.8 cm (96")
	Overall width	114.3 cm (45")
	Overall height	71.1 cm (28")
	Wet mass ± 2 kg (5 lbs)	151.7 kg (335 lbs)
ELECTRICAL	Ignition type	Bosch CDI/RCPK-12V/10W
	Magneto generator output	10 watts
	Spark plug Bosch	W340S2S
	Spark plug gap	0.4 mm (.016")
	Spark plug torque	24-29 N•m (17-20 ft/lbs)
	Ignition timing at R.P.M.	3.41 mm 24° 31' at 5000 R.P.M.
	Lighting coil resistance *	7.3 ohms
	Generating coil resistance *	
	Low	1040 ohms - red/yellow
	High	48 ohms -red
	Trigger coil resistance *	54 ohms
	Trigger coil gap with mag. ring	0.6 to 0.9 mm (.023 to .035")
	Electronic advance box	Brown/violet/white wires
	Voltage regulator	20 amps.
	Fuse (tacho)	0.1 amp.

* Component temperature must be around 15-20°C (60-70°F) when testing.
Values may vary ± 10%.