EVINRUDE & JOHNSON

'74

snowmobile

service manual

45 HP MODELS: E-264RC
J-264RC

SNOWMOBILE DIVISION/OUTBOARD MARINE CORPORATION, 3031 NORTH 114th STREET, MILWAUKEE, WISCONSIN 53222
OUTBOARD MARINE CORPORATION OF CANADA LTD., PETERBOROUGH, CANADA.

PART NO. 406239

SECTION 1
INTRODUCTION

SAFETY SYMBOLS

THE PURPOSE OF SAFETY SYMBOLS IS TO ATTRACT YOUR ATTENTION TO POSSIBLE DANGERS. THE SYMBOLS, AND THE EXPLANATIONS WITH THEM, DESERVE YOUR CAREFUL ATTENTION AND UNDERSTANDING. SAFETY WARNINGS DO NOT, BY THEMSELVES, ELIMINATE ANY DANGER. THE INSTRUCTIONS OR WARNINGS THEY GIVE ARE NOT SUBSTITUTES FOR PROPER ACCIDENT PREVENTION MEASURES.

SYMBOL	MEANING
△ SAFETY WARNING	FAILURE TO OBEY A SAFETY WARNING MAY RESULT IN INJURY TO YOU OR TO OTHERS.
⊘ PROHIBITED	WARNS YOU AGAINST AN ACTIVITY WHICH IS, OR MAY BE, ILLEGAL IN YOUR AREA.
NOTE	ADVISES YOU OF INFORMATION OF INSTRUCTIONS VITAL TO THE OPERATION OR MAINTENANCE OR YOUR EQUIPMENT.

Before proceeding with any repair or adjustments on this snowmobile, see △ SAFETY WARNINGS on inside front cover and on pages: 5-5, 5-6, 5-7, 6-7, 7-4, 7-13, 7-18, 7-20, 8-2, 9-2, 9-3, 10-2, 10-3, 10-4, 11-3, 11-4 and 12-5.

INTRODUCTION 1
SPECIFICATIONS 2
GENERAL SNOWMOBILE INFORMATION 3
TROUBLE SHOOTING 4
TUNE-UP PROCEDURES 5
FUEL SYSTEM 6
IGNITION AND ELECTRICAL SYSTEM 7
MANUAL STARTER 8
ENGINE 9
DRIVE TRAIN 10
STEERING, TRACK AND SUSPENSION 11
LUBRICATION AND STORAGE 12

The snow machine has been designed and built for dependable, high performance. It is important to every snow machine owner to be able to receive skilled and thorough service for his vehicle when necessary. It is important to the service dealer to be able to offer the type of skilled service which will maintain the customer's satisfaction.

This manual, together with the regularly issued service bulletins and Parts Catalogs, provide the serviceman with all the literature necessary to service this snowmobile. An effort has been made to produce a manual that will not only serve as a ready reference book for the experienced serviceman, but will also provide more basic information for the guidance of the less experienced man.

The Parts Catalogs contain complete listings of the parts required for replacement. In addition, the exploded views illustrate the correct sequence of all parts. This catalog can be of considerable help as a reference during disassembly and reassembly.

The Section Index on page 1-1 enables the reader to locate quickly any desired section. At the beginning of each Section is a Table of Contents which gives the page number on which each topic begins. This arrangement simplifies locating the desired information within this manual. Section 2 lists complete specifications on the snowmobile. All general information, including R.C. engine theory, trouble shooting, and tune up procedures, are given in Sections 3 through 5 of this manual.

Figure 1-1

Sections 6 through 11 provide fully illustrated, detailed, step-by-step disassembly and reassembly instructions and adjustment procedures. Section 12 provides lubrication and storage information. In this way, the texts treat each topic separately; theory and practice are not intermixed. This makes it unnecessary for the experienced serviceman to reread discussions of theory along with specific service information. Illustrations placed in the margins provide unimpeded reading of explanatory text, and permit close relationship between illustration and text.

Read this manual carefully to become thoroughly familiar with the procedures described, then keep it readily available in the service shop for use as a reference. If properly used, it will enable the serviceman to give better service to the snowmobile owner, and thereby build and maintain a reputation for reliable service.

This service manual covers all phases of servicing the snowmobile, however, new service situations sometimes arise. If a service question does not appear to be answered in this manual, you are invited to write to the Service Department for additional help. Always be sure to give complete information, including model number and vehicle serial number.

All information, illustrations, and specifications contained in this literature are based on the product information available at the time of publication. The right is reserved to make changes at any time without notice.

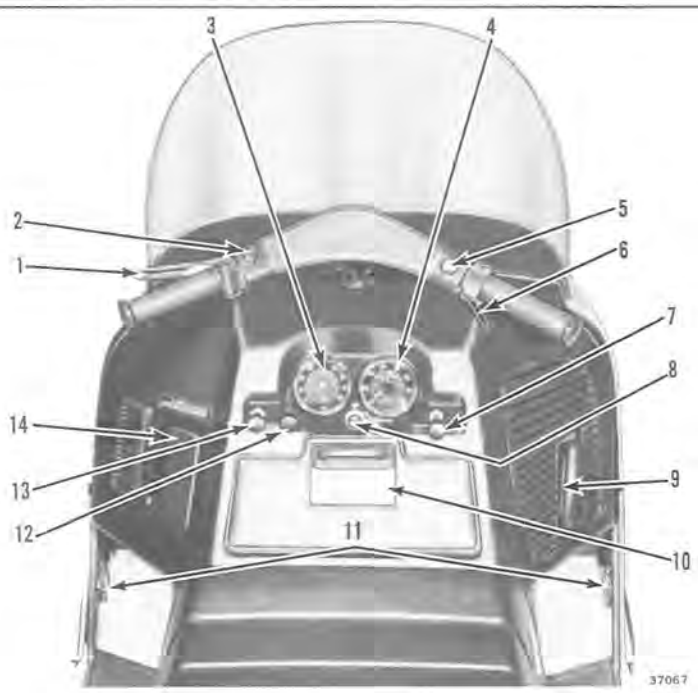

1. Hand Brake and Parking Lock
2. Hi-Lo Beam Headlight Switch
3. Tachometer
4. Speedometer/Odometer
5. Safety Stop Switch
6. Throttle
7. Primer
8. Ignition/Lights Switch
9. Manual Starter Handle
10. Instrument Panel Door
11. Hood Latches
12. Choke
13. Neutral Control
14. Reverse Control

Figure 1-2

SECTION 2 SPECIFICATIONS

2

TABLE OF CONTENTS

SPECIFICATIONS 2-2

TORQUE SPECIFICATIONS 2-3

Snowmobile Special Service Tools - 45 H.P.

PART NO.	DESCRIPTION
378103	Flywheel Puller
318501	Center Guide for Flywheel Puller
318502	Three Screws for Flywheel Puller
318541	Wrench - Flywheel Nut
*	Truarc Pliers
383966	Spring Winder
*	Heli-Coil Installers & Inserts
	Spark Plug Wrench - 12mm (11/16") Hex.
114146	Splined Wrench
162282	Drive Alignment Gauge
263308	Disassembly Tool (Primary Drive) (Clamp)
318665	Sensor Adjustment Gauge
385996	Static Air Leak Gauge

* Refer to the Tool Catalogue

SPECIFICATIONS

O PROHIBITED: Snow Vehicles are not manufactured for highway use and the manufacturer does not represent that they are equipped with all the devices legally required for such use.

Length . . . . . 107 inches
Width . . . . . 37 inches
Height . . . . . 44.9 inches with windshield
37 inches without windshield
Starter . . . . . Electric and manual
Variable speed drive . . . . . Centrifugal operated sheave engages V-belt
Overall ratio . . . . . 5 to 1
Final drive . . . . . Silent drive chain
Sprocket ratio . . . . . 17 to 39

Reverse transmission . . . . . Dog clutch and bevel gears
Muffler . . . . . Single, tuned muffler for quiet operation
Brake . . . . . Disc type, hand operated
Throttle . . . . . Thumb operated
Track . . . . . Polyurethane - Specially designed-fully adjustable
Width . . . . . 20.4 inches
Skis . . . . . Formed steel, equipped with shock-absorbing leaf springs and replaceable wear runners
Seating capacity . . . . . Two adults. Vinyl coated cover, molded urethane foam cushion
Hood . . . . . Molded fiberglass
Headlight . . . . . Sealed beam GE 4002
Taillight/stoplight . . . . . GE 1157
Tach and speedometer light . . . . . OMC 262779
Fuel tank . . . . . Capacity 5 Imperial gallons, 6 U.S. gallons
Lubrication . . . . . Evinrude, Johnson or OMC 50:1 rotary combustion lubricant
Gasoline . . . . . Regular leaded or unleaded
Carburetor . . . . . OMC float type

RPM Ratings
Idle 1100-1400
Transmission belt engaging speed . . . . . Approx. 2900-3300
Maximum RPM at which neutral control will operate. . . . . Approx. 2000
Ignition
Breakerless magneto C.D. (Capacitor Discharge) ignition
Spark plug . . . . . Champion UP-77V (Surface Gap)
Spark plug gap . . . . . Fixed
Ignition sensor coil resistance . . . . . 26-30 ohms

Magneto charge coil resistance (2 coils) total of . . . . . 875 ± 75 ohms
Ignition coil secondary resistance . . . . . 1700-2400 ohms
Lighting coil resistance (See Section 7) . . . . . 0.38 ohms ± 10%
Battery . . . . . 12 volt Canada Prestolite No. 2920, U.S.A. Prestolite No. 9955X or equivalent with a minimum 32 ampere hour rating, and with a minimum of 2.2 minutes cold starting capacity at 150 amperes discharge, 0° Fahrenheit, and a 5-second voltage reading of 7.8 volts. Dimensions in inches are approximately 7-3/4 long, 5-1/8 wide and 7-1/4 high (to top of terminals). Weight dry 17 lbs., wet 21.4 lbs. Electrolyte to fill 0.44 U.S. gallons. Specific gravity 1.265
Engine . . . . . OMC Rotary Combustion
Rating . . . . . 45 HP @ 6500 RPM
Displacement . . . . . 32 cubic inches (528cc)
Type . . . . . Single rotor, air cooled housing, charge cooled rotor, side inlet port, peripheral high performance port with progressive carburetor linkage
Compression ratio . . . . . 8.5 to 1
Rotor housing width . . . . . 3.062"
Apex seal height - normal . . . . . 0.354"
- minimum . . . . . 0.315"
Button seal nominal height . . . . . 0.212"
Side seal nominal height . . . . . 0.092"

Specifications and features may be changed at any time without notice and without obligation towards vehicles previously manufactured.

TORQUE SPECIFICATIONS

PART	APPLICATION	SIZE	TORQUE IN./LBS.	TORQUE FT./LBS.
*Nut	Ball Joint to Steering Arm and Rod End to Steering Column	3/8-24		18-20
Nut	Cable to Solenoid		36-60	
Nuts	Carburetor		75-85	6-7
Screw	Drive Sprocket	5/16-24		15-17
Screw	Engine Frame to Main Frame	3/8-16		18-20
*Nuts	Engine thru Bolts	1/4-28	75-85	
Screw	Engine to Engine Frame Assembly	3/8-16		18-20
*Nuts	Exhaust Flange	5/16-18	110-120	9-10
*Screw	Flangettes to Frame	3/8-16		20-25
*Nut	Flywheel (See Primary Drive - Reassembly)	1-3/8-12		90-110
*Nut	Front and Rear Truck Axles	5/8-18		35-45
*Screw	Idler Axle to Frame	3/8-16		20-25
Nuts	Insulator Block	5/16-18	75-85	6-7
# Screw	Intake Passage Cover to Fan End Housing	#10-24	25-35	
Setscrew	Locking Collar	#10-32	25-35	
*Bolt	Primary End Cap to Main Shaft	3/4-16		90-100
*Screw	Primary Sliding Sheave to Hub	1/4-20		7-10
Nut	Ratchet Tube	1"-16		40-45
Bolt and Nut	Rear Axle Pivot	5/16-24		12-15
Setscrew	Rear Sprocket	3/8-16		18-20
Nut	Rear Suspension to Frame	5/16-24		12-15
*Nut	Runner to Ski	5/16-18	90-100	
*Screw	Secondary End Cap to Shaft	3/8-16		22-25
# Screw	Sensor to Flywheel End Housing	#10-24	10-12	
# Screw	Sensor Shield to Flywheel End Housing	#10-24	10-12	
*Screw	Shifter Clevis to Pinion Shaft	1/4-28	160-180	
* +	Spark Plug Cold	12mm	150-180	12-15
Nut	Throttle Cable Adjusting Screw	5/16-18	60-80	
*Nut	Tie Rod to Ball Joint and Rod End	3/8-24		14-16
*Screw	Truck to Frame	3/8-16		25-30
*Screw	Truck to Frame	7/16-14		25-30
*Nut	U Bolt to Saddle			10-12
Screw	General Torque Requirements	#6	7-10	
Screw		#8	15-22	
Screw		#10	25-35	2-3
Screw		#12	35-40	3-4
Screw		1/4	60-80	5-7
Screw		5/16	120-140	10-12
Screw		3/8	220-240	18-20
Screw		7/16	340-360	28-30

Specifications and features may be changed at any time without notice and without obligation towards vehicles previously manufactured.

*Use Torque Wrench

Apply Loctite Retaining Compound #40 Flywheel Nut

#Apply Loctite Compound TL242

+Exercise care to avoid over torqueing (especially in a hot engine) or damage to the rotor housing may result.

SECTION 3
GENERAL SNOWMOBILE INFORMATION

3

TABLE OF CONTENTS

ROTARY COMBUSTION ENGINE THEORY . . . 3-2

RC ENGINE PARTS NOMENCLATURE AND FUNCTION 3-3

COMPRESSION 3-5

CARBURETION 3-5

COOLING 3-6

IGNITION 3-7

LIGHTING SYSTEM 3-8

POWER FLOW 3-8
- PRIMARY DRIVE 3-8
- NEUTRAL CONTROL 3-8
- SECONDARY DRIVE 3-8
- REVERSE TRANSMISSION 3-10

ROTARY COMBUSTION ENGINE THEORY

The rotary combustion (RC) engine is an internal combustion engine working on the Otto cycle whereby the expanding gases from combustion force a three-lobed rotor inside a chamber to rotate. The rotor turns the output shaft.

The RC engine runs on the same induction (fuel intake), compression, ignition/expansion and exhaust principal as four cycle engines. The RC engine is unique in that all four phases are taking place around one rotor at the same time. (See Figure 3-1.) As the rotor moves in a clockwise direction around the stationary gear in the center, we see that a vacuum is created at positions 1-4 and a fuel/air mixture from the carburetor is thus induced into the engine through the open intake port (I) . In positions 5-7 the intake port is closed, and compression of the fuel/air mixture takes place. Then we have ignition and combustion of the compressed fuel/air mixture. The expanding gases push the rotor as shown in 8, 9 and 10. The exhaust port (E) then opens, and the exhaust is squished out as shown in 11, 12 and 1. Various phases of this process are, of course, taking place at all three flanks of the rotor at the same time. Steps one thru twelve above occur during one complete revolution of the rotor.

The rotor, while riding in its orbital path, pushes an eccentric on a shaft. (See Figure 3-2.) A set of needle bearings separate the rotor

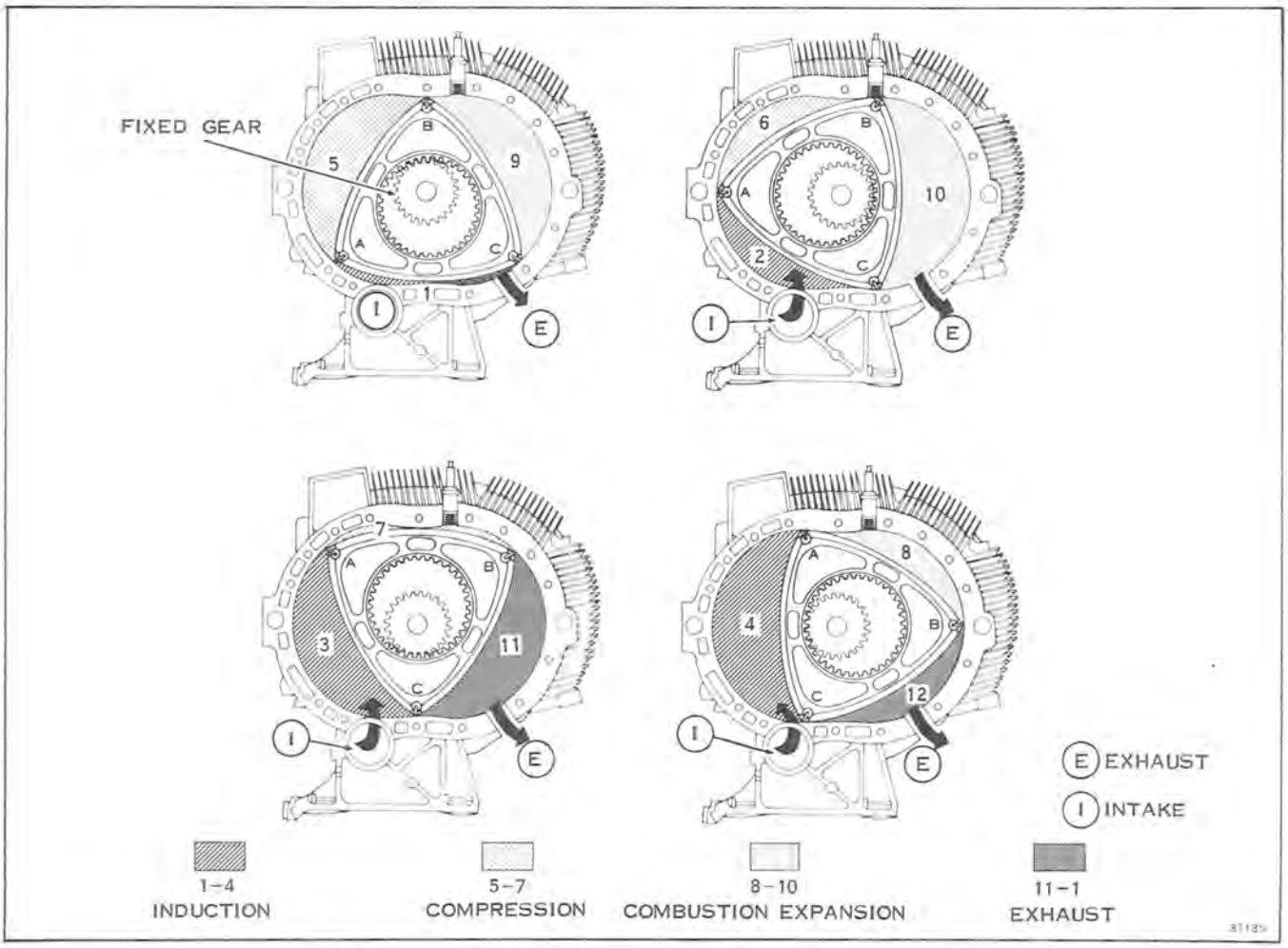

Figure 3-1

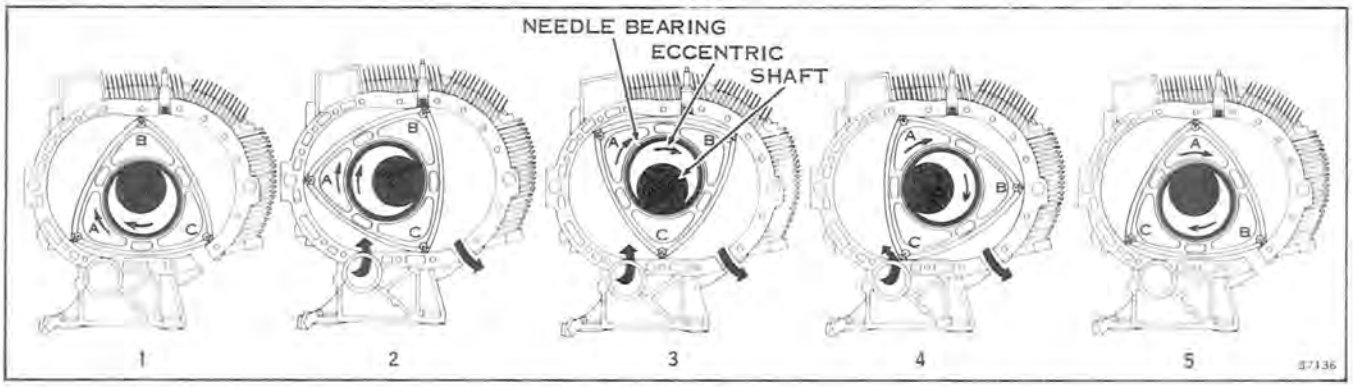

Figure 3-2

and eccentric. Following the rotor through diagrams 1-2-3-4-5, we notice that in each diagram the eccentric shaft has advanced 1/4 turn clockwise. One-third rotation of the rotor, therefore, turns the eccentric shaft one full rotation, and one complete revolution of the rotor turns the eccentric shaft three times. An RC engine running at 6000 RPM receives 6000 power strokes, but the rotor is turning only 2000 RPM.

R.C. ENGINE PARTS NOMENCLATURE & FUNCTION (See Figure 3-3)

A. ROTOR HOUSING: Center member of the three part engine "case." Inner surface is trochoid in shape, has cooling fins on the outside, peripheral intake and exhaust ports through the trochoid surface and the spark plug hole and fuel pump pulse pressure port. It has the high performance inlet port passage and throttle valve and motor mount in the rotor housing base.

B. ROTOR: The rotating piston in the RC engine. The rotor controls the intake, compression, expansion and exhaust phases of the engine. The rotor contains the apex, button, and side seals and transmits combustion pressure to the eccentric shaft to produce power. The rotor turns at 1/3 eccentric shaft speed, kept in proper orientation within the rotor housing by a fixed gear on the output side housing which meshes with the internal gear in the rotor.

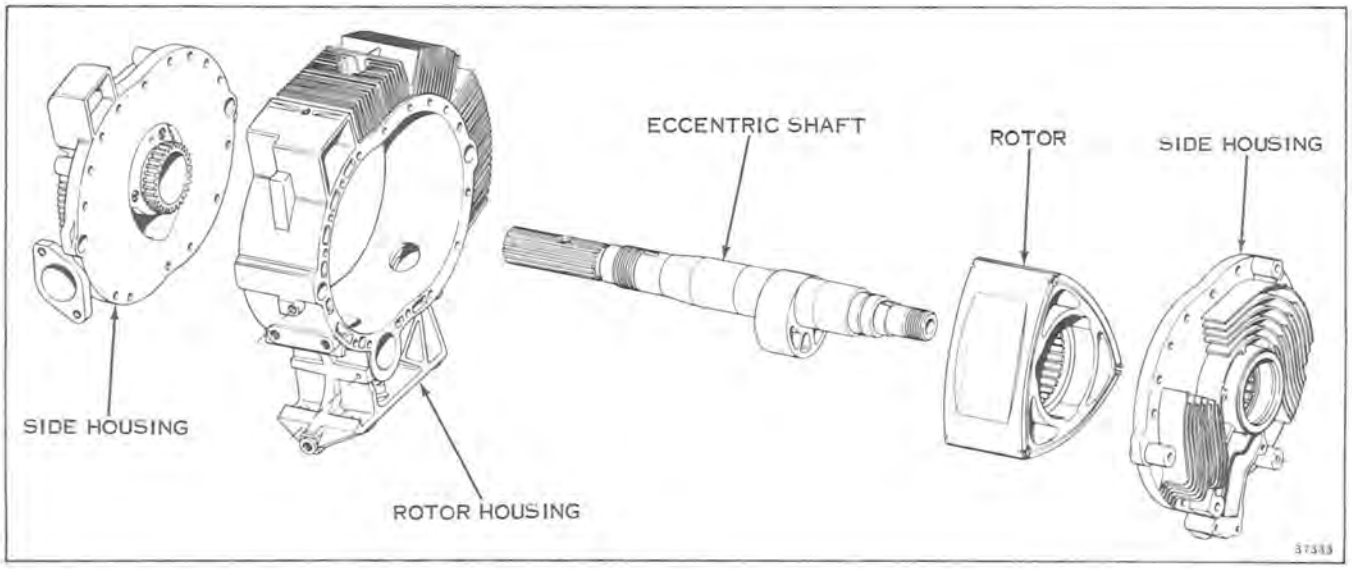

Figure 3-3

C. ECCENTRIC SHAFT: The eccentric shaft turns in side housing main bearings. The eccentric shaft is pushed by the rotor from which it is separated by a set of needle bearings. The eccentric shaft is the first power producing member. It supports full force of combustion pressure, and carries the flywheel and primary drive sheaves on the output end and the fan and manual starter on the other end.

D. SIDE HOUSINGS: The side housings form the sides of the combustion chambers. They contain the main eccentric shaft bearings and seals, carburetor intake manifold in flywheel side housing and side inlet port in fan end housing. Side housings are made of high silicone aluminum for good wear characteristics, and have fins on outside for cooling.

E. SEALS: Three types of seals are used on rotor: Apex seal - The apex seals fit in groove at apex of rotor. Their function is to seal adjacent chambers from each other. Each seal has a leaf spring behind it to exert a light pressure against the trochoid surface, which all three seals are always in contact with. The apex seal is a two piece seal.

Side seal - The side seals fit in grooves in side of rotor. Their function is to seal combustion chambers from the eccentric shaft cavity. A wave spring behind side seal provides a light pressure of side seal against side housing. Button seal - Button seals seal the junction point where apex and side seals meet. They separate combustion chambers and seal combustion gases from eccentric shaft cavity. Button seals have part of one coil of spring to load button against side housing.

F. BEARINGS: All roller and ball type anti-friction bearings. Lubricated by OMC RC Lubricant mixed with gasoline in a 50:1 ratio.

G. FAN: A two piece high performance, centrifugal blower supplying 1000 cubic feet of air per minute to cool the side housings and rotor housing.

H. SIDE INLET PORT: In fan end side housing, supplies all fuel/air mix to engine at idle and low RPM below 3000 RPM. Use of side inlet port gives easy starting, smooth idle and good low speed torque and throttle response.

I. PERIPHERAL OR HIGH PERFORMANCE INLET PORT: Opened by progressive linkage on carburetor, starts to open at 3000-4000 RPM. Good high speed characteristics, maximum power.

SEE BELOW

J. TROCHOID - Shape of the inner surface of the OMC RC engine.

K. MINOR AXIS - Axis thru the narrow dimension of trochoid.

L. MAJOR AXIS - Axis thru longer dimension of the trochoid.

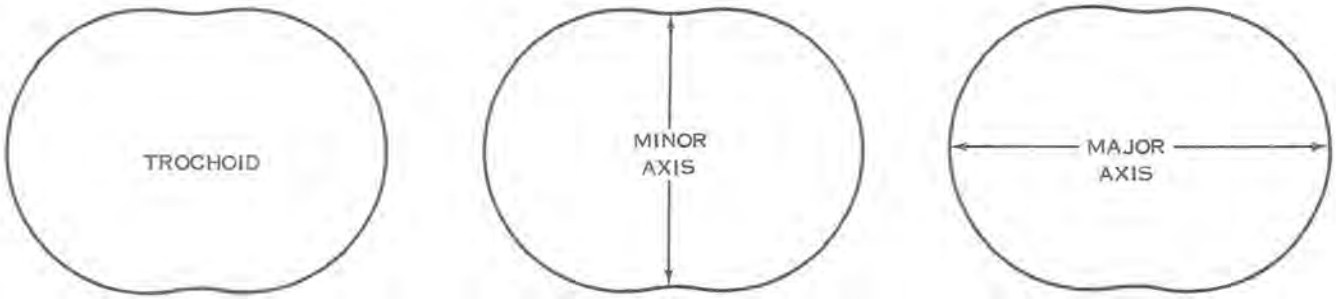

M. MINIMUM CHAMBER VOLUME - (Intake and exhaust side). Position of rotor when center of rotor flank (A-C) is closest to minor axis on exhaust and intake side of rotor housing. (SEE POSITION I)

N. MAXIMUM CHAMBER VOLUME - (Intake side). Position of rotor when chamber formed by rotor flank A-C and housing is at its maximum volume. Rotor is 90° past position I and eccentric shaft in 3/4 revolution past position I. (SEE POSITION II)

O. MINIMUM CHAMBER VOLUME - (Spark plug side). (Marked TDC-Top Dead Center on flywheel.) Position of rotor when chamber formed by rotor flank A-C and housing is at its minimum volume. Rotor is 180° past position I and eccentric shaft is 1-1/2 revolutions past position I. (SEE POSITION III)

P. MAXIMUM CHAMBER VOLUME - (Exhaust side). Position of rotor when chamber formed by rotor flank A-C and housing is at its maximum volume. Rotor is 270° past position I and eccentric shaft is 2-1/4 revolutions past position I. (SEE POSITION IV)

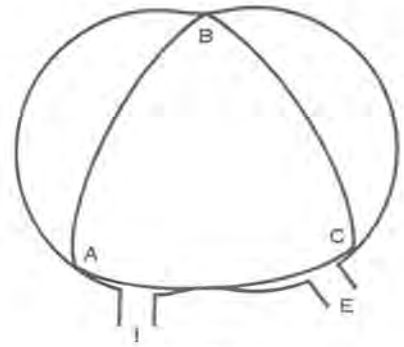

POSITION I

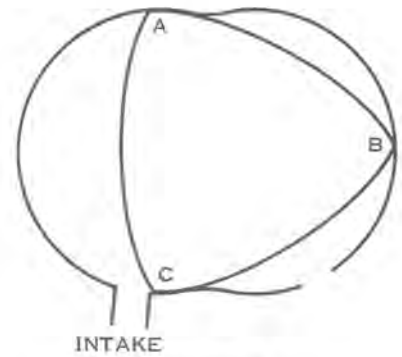

POSITION II

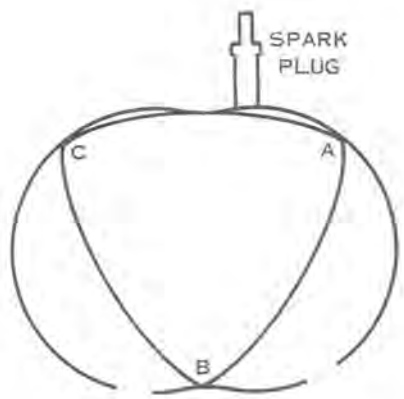

POSITION III

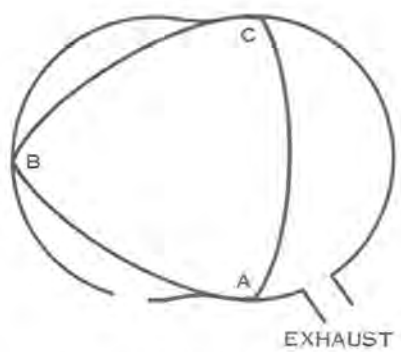

POSITION IV

COMPRESSION

Compression of the fuel/air mixture in the rotating chamber is necessary for the proper operation of the RC engine, just as it is in the reciprocating engine. Proper compression is the result of maximum sealing of the intake gases in the rotating chamber from the time of Maximum Chamber Volume (Intake side) to Minimum Chamber Volume (spark plug side) - See Theory above. This is accomplished thru good rotor seals, with proper spring tension behind them, and a smooth trochoid and side housing surfaces. The seals and rotor flanks perform two functions. They compress the fuel/air mixture before ignition and receive the force of combustion after ignition. Escape of the combustion gases past the rotor seals is referred to as "blow by" and is indicated by discoloration, and carbon in the area of the rotor sides, eccentric shaft, fixed and rotor gears and internal surfaces of rotor. Loss of compression or combustion gases past poor seals will result in loss of power and inefficient performance. Grooves for rotor seals must be free from carbon to allow seals to shift within them.

CARBURETION

Gasoline, in its liquid state, burns relatively slow with an even flame. However, when gasoline is combined with air to form a vapor, the mixture becomes highly flammable and burns very fast. To obtain best results, the fuel and air must be correctly proportioned and thoroughly mixed. This mixture is then atomized by spraying through fine nozzles into an air stream. This is the function of the carburetor.

The atomized mixture is later vaporized in the carburetor barrel, intake manifold and rotary chamber, with a few particles clinging to the chamber surface.

Gasoline vapor will burn when mixed with air in a proportion from 12:1 to 18:1 by weight. Mixtures of different proportions are required for different purposes. Idling requires a relatively rich mixture; a leaner mixture is desirable for maximum economy under normal load conditions; avoid lean mixtures for high speed operation. The carburetor is designed to deliver the correct proportion of fuel and air to the engine for these various conditions.

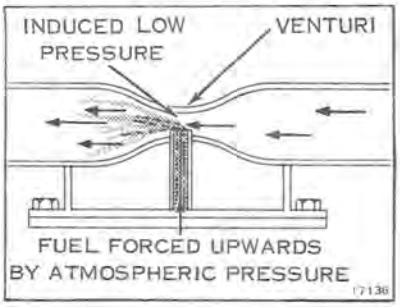

Figure 3-4

The carburetor is essentially a simple metering device. Needle valves permit a precise amount of fuel to flow to the carburetor throat. A small chamber holds the fuel as it is consumed by the engine. Nozzles in the carburetor throat extend down into the fuel chamber. At a particular point the throat is restricted by a venturi (see Figure 3-4). The venturi has the effect of reducing air pressure in the air stream, creating a partial vacuum which draws fuel from the jet nozzles. As it is rushed along to the firing chamber, the fuel is swirled about in the air stream and vaporized.

Movement of the rotor in the housing creates a suction which draws the fuel/air mixture thru the carburetor barrel and into the engine. The fuel mixture is admitted to the rotor housing thru two different ports. During start-up and low RPM (below 3000 RPM), fuel is drawn into the engine thru the side inlet port. At high speeds, progressive linkage on the carburetor admits the fuel/air mixture to the engine by opening the peripheral port throttle. Use of the side inlet port provides good engine performance at low speeds, and peripheral porting gives maximum power at high engine speeds.

A throttle or butterfly valve in the throat regulates the amount of air drawn through the carburetor. To vary the speed of the engine, the throttle opens or closes, regulating the amount of fuel/air mixture drawn into the engine.

A richer fuel mixture is required for starting a cold engine. A second shutter, called a choke, is placed into the throat forward of the jets, to restrict the flow of air. When the choke shutter is closed, more gasoline and less air is allowed into the air stream resulting in a richer fuel/air mixture. When normal operating temperature is reached, the choke is opened and the standard ratio of gasoline and air is allowed to flow from the carburetor.

COOLING

The engine is cooled from two different sources, ① the induction air and fuel mixture thru the engine itself; and ② air forced thru fins on the outside of the engine. See Figures 3-5 and 3-6.

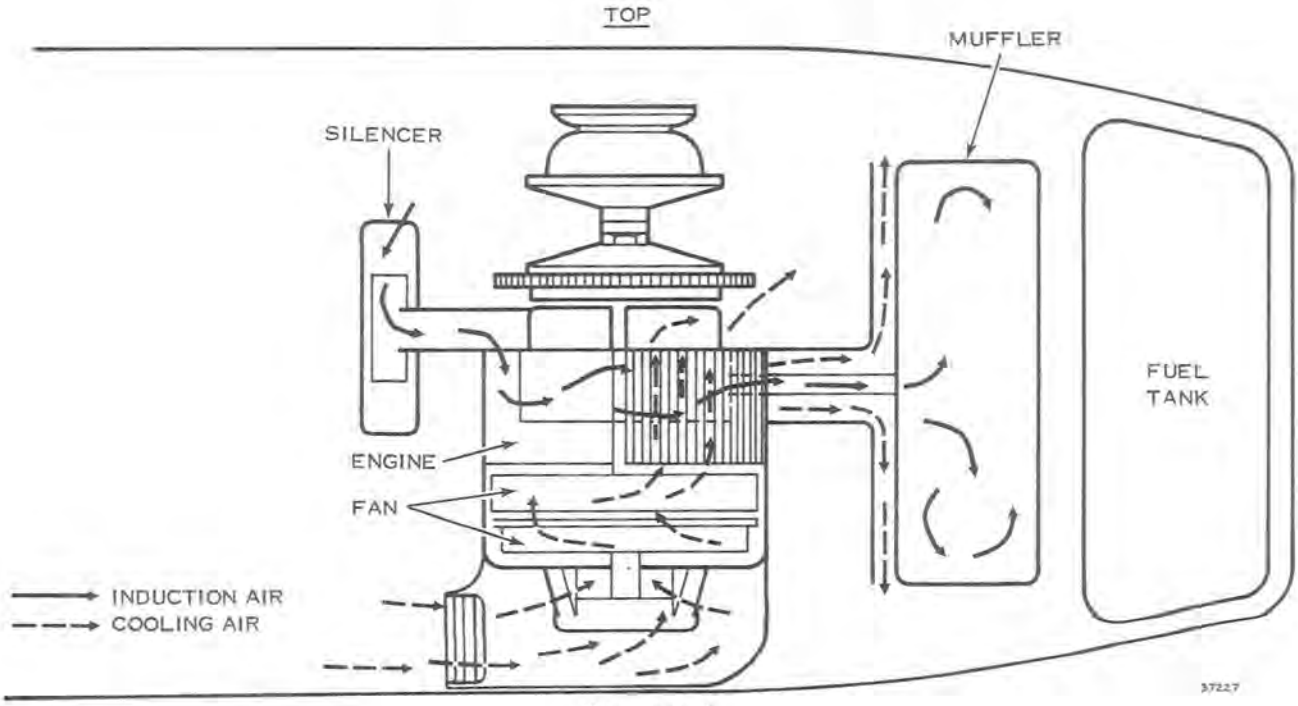

Figure 3-5

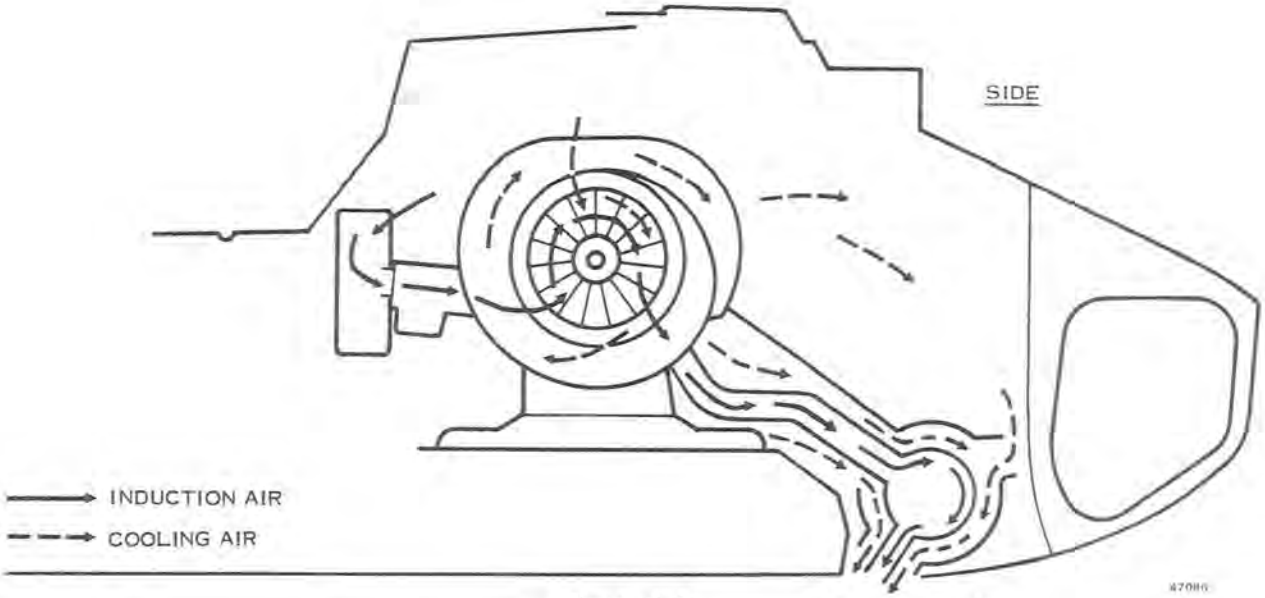

Figure 3-6

The induction air and fuel thru the engine is called charge cooling. The air/fuel mixture enters the flywheel end side housing and is ported thru openings in the rotor, cooling the rotor before entering the combustion chamber.

Cooling air is drawn thru louvers in the right side of the instrument panel, and thru openings under the manual starter by a two piece centrifugal blower at the rate of 1000 cubic feet per minute. The air is then pushed thru the side and rotor housing fins and then ducted around the exhaust pipe and muffler. Air under the hood is pressurized and escapes thru a slot behind the muffler and out the bottom of the snowmobile.

NOTE

THE HOOD MUST BE ON THE SNOWMOBILE WHEN OPERATING FOR PROPER COOLING OF THE MUFFLER AND ENGINE.

IGNITION

The magneto capacitor discharge (CD) ignition system generates a high voltage electric current which jumps the spark plug gap within the chamber and thus ignites the compressed fuel/air mixture in the chamber.

This system is made up of the following major components:

1. Flywheel assembly
2. Stator and charge coil assembly
3. Ignition sensor assemblies
4. Power Pack RB assembly
5. Ignition coil

The following sequence of events will illustrate how this system works.

The flywheel rotates around the stator and charge coil assembly. (See Figure 3-7.) The magnets in the flywheel and the (2) charge coils generate a voltage. This voltage (AC) flows into the Power Pack RB. Here it is changed to DC and stored in a capacitor. At the same time the sensor magnet rotates by the ignition sensor coil and a smaller AC voltage is generated. This smaller voltage flows into Power Pack RB and causes an electronic switch in Power Pack RB to turn on allowing the voltage stored in the capacitor to discharge into the primary of the ignition coil. If the engine speed should reach approximately 7300 RPM, the built in overspeed protection with Power Pack RB will cause the second SCR to conduct continuously.

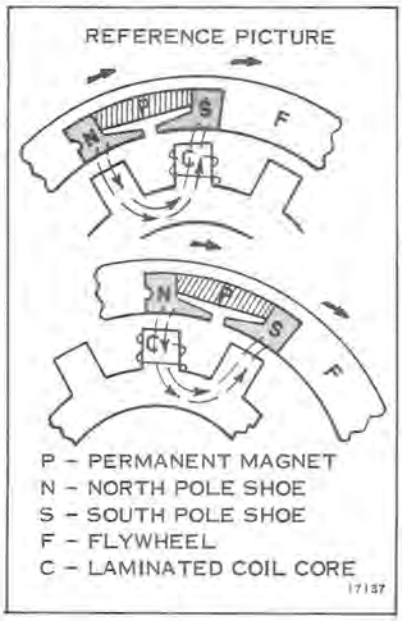

Figure 3-7

The ignition coil primary receives the voltage from Power Pack RB, building up the secondary voltage high enough to fire across the spark plug gap.

LIGHTING SYSTEM

The alternator coils produce alternating current which changes in frequency and voltage in proportion to the engine speed.

This alternating current output is converted to direct current by a diode bridge rectifier and used to charge the battery. Direct current from the battery is then used to power the headlights and taillights, and the electric starter motor.

The alternator output is automatically increased to maximum charge when lights are turned on.

POWER FLOW

The transmission assembly transmits power from the engine to the front axle which propels the vehicle along the track. The primary sheave assembly is attached directly to the crankshaft. The secondary sheave assembly has its own mounting pedestal and is larger in diameter than the primary sheave assembly. The two are connected by a transmission belt.

PRIMARY DRIVE

The primary sheave is centrifugally operated and engages the transmission belt when the engine speed reaches 2800 to 3200 RPM. When the engine is rotating at idle speed or below 2800 to 3200 RPM, the transmission belt rides on a ball bearing between the halves of the primary sheave assembly (see Figure 3-8). The primary sheave assembly halves are separated by a compression spring in the hub of the movable sheave half.

As the engine speed increases, centrifugal effect forces a garter spring in the end cap outward against the contour of the end cap and axially against the movable sheave half. As the sheaves are brought

A. Neutral Lockout Plunger
B. Emergency Starting Sheave
C. Garter (Activating) Spring
D. End Cap
E. Movable Half of Sheave
F. Transmission Belt
G. Fixed Sheave/Flywheel
H. Eccentric Shaft
I. Ball Bearing
J. Spring Cup
K. Compression Spring
L. Neutral Lockout Balls
M. Splined Shaft
N. Bolt, End Cap to Splined Shaft
O. Spring
P. Neutral Lockout Rod
R. Spring
S. Flywheel Nut

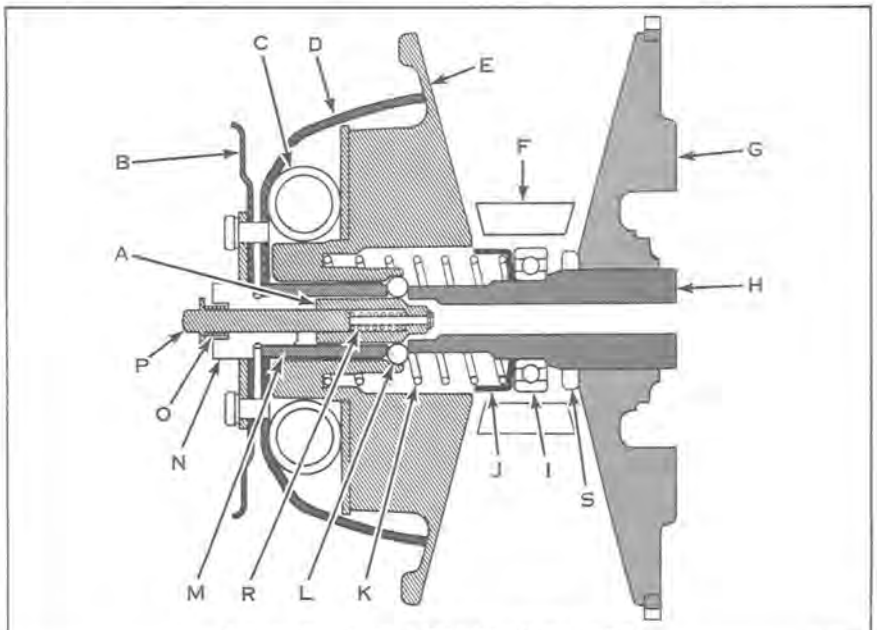

TRANSMISSION LOCKED IN NEUTRAL

Figure 3-8

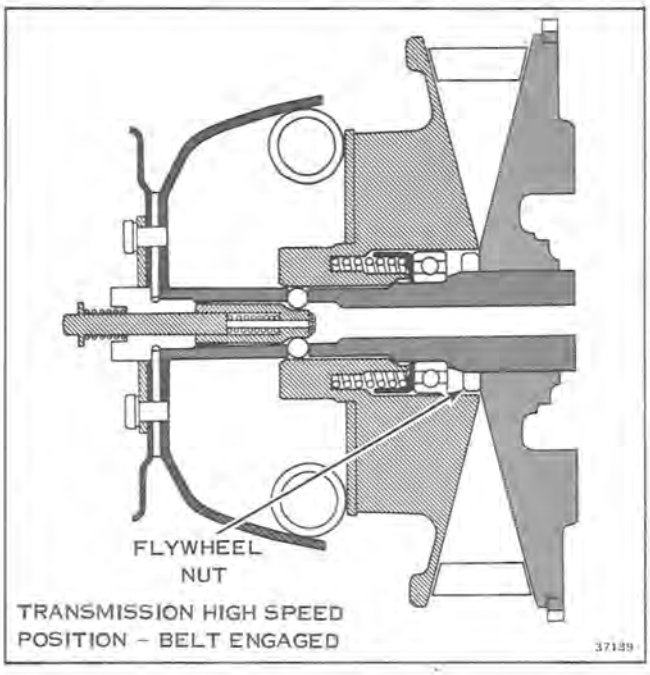

Figure 3-9

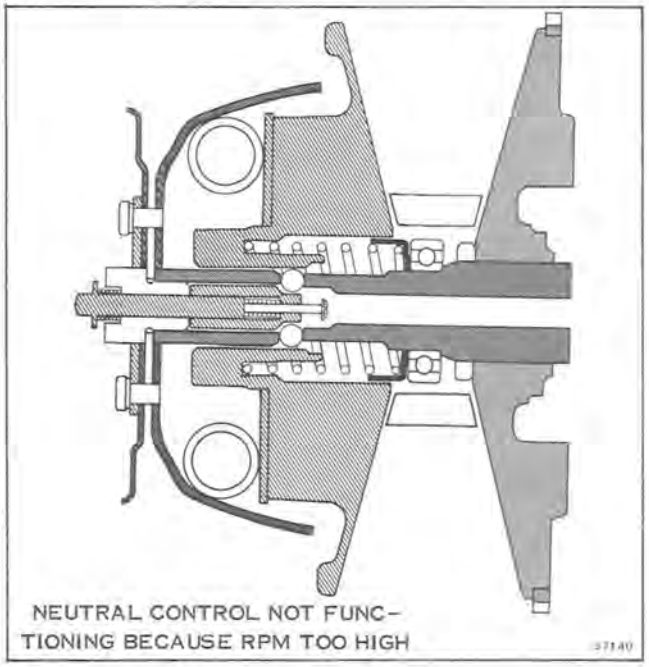

Figure 3-10

together, the transmission belt is forced outward to ride on a larger diameter of the primary sheave assembly, increasing belt speed (see Figure 3-9). Since the belt length remains constant, the secondary sheave halves spread apart, allowing the belt to ride on a smaller diameter. In this way, the engine transmits power through a variable ratio, presenting the engine with a mechanical advantage most favorable for the speed at which it is operating.

NEUTRAL CONTROL

A netural control mechanism is used to prevent the drive from engaging during starting, warm-up period, and idle. When the neutral lockout plunger is actuated, a cone on the end of the plunger raises two balls through the splines of the primary sheave assembly and into the path of the movable sheave half, preventing it from engaging the belt. The neutral control is spring actuated and will engage only when the engine is below approximately 2000 RPM.

When the engine is running above approximatley 2000 RPM, the garter spring will expand by centrifugal effect. See Figure 3-10. The garter spring will then ride up the ramp of the end cap and push the movable sheave toward the fixed sheave. In doing this, the movable sheave has covered the holes in the splined shaft. When the neutral lockout rod (P-Figure 3-8) is not pushed in, the spring loaded plunger (A-Figure 3-8) cannot move in because the movable sheave now covers the neutral lockout balls. Spring (R-Figure 3-8) will therefore be compressed as shown in Figure 3-10. If the engine speed is now reduced to below 2,000 RPM, the garter spring will close and allow the movable half of the sheave to move away from the fixed sheave. Spring (R) will then push the plunger inward. The neutral lockout balls will then move outward, through the splined shaft. The movable sheave will now be locked in the neutral position. See Figure 3-8.

SECONDARY DRIVE

The secondary drive mechanism incorporates a torque sensing device that detects the need for more power for steep inclines or deep snow.

The mechanism immediately forces the secondary sheaves closer together to lower the transmission ratio and provide a higher torque to the drive chain and track.

The drive ratio varies from 3.3 to 1 in low to .67 to 1 in high which yields an overall drive range of approximately 5 to 1. Power is transmitted from the secondary sheave assembly through a drive chain to the front axle.

The ratio between the secondary sheave assembly and the front axle is 17:39.

REVERSE TRANSMISSION

The reverse gear is designed as part of the secondary drive. In "Forward" gear, the input shaft drives the output shaft directly by means of a "dog" type clutch. IN "reverse" gear, the dog clutch is released while a gear set engages to reverse rotation of output shaft.

NOTE

Shifting must be done with the engine at idle and machine at rest.

SECTION 4
TROUBLE SHOOTING

4

TABLE OF CONTENTS

DESCRIPTION 4-2

TROUBLE SHOOTING PROCEDURES 4-3
STARTING 4-3
STARTING - MANUAL STARTER 4-3
STARTING - ELECTRIC STARTER 4-4
RUNNING - LOW SPEED 4-4
RUNNING - HIGH SPEED 4-4
RUNNING - HIGH AND LOW SPEED 4-5

DESCRIPTION

This section provides trouble shooting procedures for the snow machine. Steps to be followed in determining causes of unsatisfactory performance are outlined.

Being able to locate the cause of trouble in an improperly operating snow machine is as important as being able to correct the trouble. A systematic approach to trouble shooting is important if the trouble is to be located and identified in minimum time.

Any service operation can be broken down into three steps:

1. Identifying the problem

2. Determining the cause of the problem, and

3. Correcting the problem.

Familiarity with the factors which affect rotary combustion engine performance is important in making a correct service diagnosis. Factors which affect engine performance include the quality of the fuel and fuel mixtures, compression, ignition, and proper drive system adjustment. Engine theory, compression, carburetion, ignition and power flow are discussed in Section 3. Correct fuel mixture for this snowmobile is outlined on the inside front cover, and fuel blending is discussed in Section 12. Familiarity with factors which contribute to abnormal performance of an engine are similarly helpful. The skilled mechanic's experience is a great asset here.

TROUBLE SHOOTING PROCEDURES

Trouble shooting to determine the cause of any operating problem may be broken down into the following steps:

a. Obtaining an accurate description of the trouble.

b. Preliminary inspection.

c. Use of Trouble Check Chart to analyze engine performance.

An accurate description of the trouble is essential for trouble shooting. The owner's comments may provide valuable information which will serve as a clue to the cause of the problem.

Preliminary Inspection

1. Engine turns over freely
2. Spark at spark plug
3. Carburetor adjusted properly
4. Power port butterfly closed completely at idle
5. Air cleaner clean and properly installed
6. Air intake clean and not restricted
7. Cooling fan intake not restricted and fan air exit under muffler not restricted
8. Proper fuel and oil in tank
9. Static air leak check within limits (see Section 5)

STARTING

1. Hard to start or won't start
   a. Low static air leak check (see Section 5)
   b. Old fuel, water in fuel, or restricted fuel passages
   c. Choke not working properly
   d. Primer not working properly
   e. Carburetor low speed needle not adjusted correctly
   f. Bad spark plug
   g. No spark
   h. Air cleaner or intake blocked or restricted
   i. Clogged fuel line or filter
   j. Engine flooded
   k. Faulty or missing gaskets on intake systems
   l. Weak battery or faulty electric starter
2. Engine turns over extremely easy
   a. Low static air leak check
   b. Spark plug loose
   c. Cracked or broken engine castings
3. Engine starts, but stops immediately
   a. Fuel pump not working
   b. Carburetor low speed system blocked or out of adjustment
   c. Fuel filter clogged
   d. Choke not working properly
4. Engine won't turn over
   a. External parts assembled wrong causing interference
   b. Rotor assembled upside down, gears not meshing
   c. "J" gap plug installed instead of surface gap type
   d. No gasket under surface gap plug
   e. Bearings seized
   f. Rotor cracked or broken
   g. Engine castings cracked or broken
5. Weak spark or no spark
   a. Faulty charge coil
   b. Faulty sensor coil
   c. Faulty Power Pack
   d. Grounded ignition switch or wire
   e. Flywheel not magnetized
   f. Faulty ignition coil or leads
   g. Ignition switch not working

STARTING - MANUAL STARTER

1. Manual starter pulls out, but starter does not engage flywheel
   a. Friction spring bent or burred

b. Excess or incorrect grease on pawls or spring

c. Pawls bent or burred

d. Pawls frozen (water) in place

2. Starter rope does not return

a. Recoil spring broken or binding

b. Starter housing bent

c. Loose or missing parts

3. Clattering manual starter

a. Friction spring bent or burred

b. Starter housing bent

c. Excess or incorrect grease on pawls or spring

d. Dry starter spindle

STARTING - ELECTRIC STARTER

1. Starter cranks too slowly

a. Weak battery

b. Loose or corroded connections or ground connection

c. Faulty starter solenoid or solenoid wiring

d. Worn armature brushes or spring

e. Faulty field or armature (shorted or open windings)

2. Starter will not crank engine

a. Weak battery

b. Loose or corroded connections or ground

c. Broken wire in harness or connector

d. Faulty ignition key switch

e. Faulty starter solenoid or solenoid wiring

f. Moisture in starter motor

g. Broken or worn brushes or broken brush spring

h. Faulty field or armature (shorted or open windings)

i. Starter does not engage with engine because drive gear is not free on helix.

3. Starter will not disengage flywheel ring gear.

a. Drive gear is not free on helix (debris must be removed).

b. Lubricate helix.

RUNNING - LOW SPEED

1. Low speed miss

a. Incorrect gas - lubricant ratio

b. Incorrect idle adjustment

c. Loose or broken ignition coil wires

d. Spark plug terminal loose

e. Weak coil

f. Loose electrical connections

g. Power port butterfly not closed completely

h. Bad or missing gaskets around intake manifold

i. Choke not operating correctly

j. Low static air leak check (see Section 5)

k. Sensor gap adjustment (see Section 7)

RUNNING - HIGH SPEED

1. High speed miss

a. Water in fuel

b. Weak spark

c. Arcing around ignition coil or leads

d. Bad spark plug

e. Low static air leak check (see Section 5)

f. Carburetor inlet needle sticking

2. Poor acceleration, top rpm is low

a. Incorrect gas - lubricant ratio

b. Old fuel

c. Fuel hose pluged or kinked

d. Fuel filter restricted

e. Bad fuel pump

f. Pulse line to fuel pump restricted

g. Loose or broken high tension lead

h. Weak coil

i. Bad Power Pack

j. Carburetor passageways restricted

k. Power port butterfly not opening completely

l. Overheating

m. Low static air leak check

n. Fuel tank vent restricted or blocked

RUNNING - HIGH AND LOW SPEED

1. Engine overheats

a. Incorrect gas - lubricant ratio

b. Improper engine assembly

c. Cooling fins blocked by foreign material

d. Cooling fan intake restricted

e. Cooling air exit restricted

f. Dirty air filter

g. Air intake restricted

h. Intake air box leaking, getting air from under shroud

2. Engine seizes (stops suddenly)

a. No oil in gas

b. Seized rotor or main bearing

c. Broken rotor or stationary gear

d. Cracked or broken engine castings

SECTION 5
TUNE-UP PROCEDURES

5

TABLE OF CONTENTS

DESCRIPTION 5-2

FACTORS AFFECTING PERFORMANCE 5-2
FUEL SYSTEM 5-2
IGNITION SYSTEM 5-2
COMPRESSION 5-2

NEW VEHICLE DELIVERY 5-3

TUNE-UP PROCEDURES 5-3

STATIC AIR LEAK CHECK 5-5
CARBURETOR ADJUSTMENTS 5-7

LOW SPEED NEEDLE VALVE AND
IDLE ADJUSTMENT SCREW 5-7

SPARK PLUG 5-7

DESCRIPTION

The purpose of a tune-up is to restore power and performance which have been lost through wear or deterioration of one or more parts of the snow machine. The successful completion of a tune-up depends on an understanding of principles of rotary combustion engine operation, and a familiarity with factors affecting performance. This section gives complete tune-up procedures. Refer to Section 3 for principles of operation, and to Section 4 for trouble shooting procedures. Lubrication procedures and instructions for storage are included in Section 12.

FACTORS AFFECTING PERFORMANCE

In the normal operation of an engine, the operator may not be fully aware of the decrease in performance which takes place slowly over a long period of time. Economical, trouble-free operation can best be assured if a complete tune-up is performed at least once each year, preferably at the start of the season.

It is seldom advisable to attempt to improve performance by correcting one or two items only. Time will be saved and more lasting results obtained by following a definite and thorough procedure of analysis and by correcting all items affecting power and performance.

FUEL SYSTEM

A fresh fuel mixture, with the correct ratio of lubricant and gasoline, is necessary for peak engine performance. The tank should be removed, emptied of old fuel, rinsed out, installed and refilled with a fresh supply at the beginning of the season and at every tune-up. A stale fuel mixture may cause hard starting, stalling, and faulty operation. Inadequate fuel delivery, as the result of a faulty fuel pump or clogged filter, will affect high-speed performance. Incorrect carburetor needle adjustment may cause operating difficulties at idle speed. Faulty choke operation or incorrect use of the manual choke by the operator may cause hard starting, rough running, or poor fuel economy. See Section 3 for a discussion on carburetion.

IGNITION SYSTEM

A good ignition system is of prime importance for peak engine performance. A weak spark, which may be the result of faulty ignition system components, will cause hard starting, misfiring, or poor high-speed performance. The spark plug and ignition system components are frequently checked first in a tune-up because of their importance to the operation of the engine. See Section 3 for a discussion on ignition theory, and Section 7 for complete ignition system analysis.

COMPRESSION

Compression must be well sealed by the rotor and seals in the chamber to realize maximum power and performance. Compression can be checked by using the static air leak check described on Page 5-5. A compression check is important because an engine with low or uneven compression cannot be tuned successfully to give peak performance. It is essential that the static air leak check be made before proceeding with an engine tune-up.

NEW VEHICLE DELIVERY

Complete instructions for putting a new snowmobile into operation are included in the Owner's Manual and assembly instruction packed with each snowmobile. Be sure the customer receives this manual and understands the instructions given in it. The following list is a reminder of important things to check when putting a new snowmobile into operation.

a. Be sure spark plug is installed and tightened securely (12-15 ft. lbs. Cold) with spark plug gasket in place.

b. Be sure spark plug lead is securely attached to spark plug terminal.

c. Be sure the correct gasoline and lubricant mixture is used. Pour mixture into tank through a fine mesh strainer.

d. Caution the customer not to operate a new engine at continuous full power until at least one tankful of fuel has been used. During this time, short periods of full power may be used. Instruct the customer to follow the break-in procedure described in the Owner's Manual.

e. Be sure that the customer understands how to operate the engine correctly, especially such things as the neutral control, choke, electric starting, and reverse shift lever.

TUNE-UP PROCEDURES

Components which affect engine power and performance can be divided into three groups, namely:

1. items affecting compression,

2. items affecting ignition,

3. items affecting carburetion.

Any tune-up procedure should cover these groups in the order given. Correction of items affecting carburetion should not be attempted until all items affecting compression and ignition have been corrected satisfactorily. Attempts to overcome compression or ignition system deficiencies by altering carburetor settings will result in poor overall performance or increased fuel consumption. This section covers only those parts of a tune-up which involve adjustments, cleaning, and checking for performance. Trouble shooting procedures are covered in Section 4. Repair and replacement of parts, as determined through trouble shooting, is covered in Sections 6 through 11.

a. Test run vehicle, checking particularly the following:

1. Neutral control

Can transmission be locked in neutral when machine is at rest and engine at idle speed?

2. Function of brake

3. Engine performance

4. Ski alignment and handling

5. After running snowmobile, reduce engine speed to idle and pull neutral control knob out to lock transmission in neutral. Accelerate engine to see if transmission is in neutral. Neutral control is spring actuated, and cannot be engaged above approximately 2000 rpm.

b. Perform static air leak test, see page 5-5.

c. If engine knocks, check for loose fan or flywheel. Remove manual starter and fan housing (see Section 8). Rock fan back and forth and listen for knocks.

Check for end play by pushing and pulling on flywheel. End play tolerance is .007 to .030.

If excessive play is detected between flywheel and side housing. Inspect the roller bearing retaining ring in the fan end housing. If it is bowed outward then the roller bearing should be re-seated and a new snap ring installed. If the retaining ring is not bowed then the ball type thrust bearing in the fan and housing must be replaced.

d. If static air leak check is not satisfactory, engine overhaul is required (see Section 9).

e. Test ignition system using spark checker and neon D.C. Tester. Inspect high tension lead. See Section 7.

f. Check spark plug to be sure it is the correct type. Clean spark plug or replace as necessary.

g. Remove and drain fuel tank, flush, and clean thoroughly (see Section 6). Install tank, refill with fresh fuel mixture and check primer operation.

h. Inspect fuel pump and hoses. Clean filter, or replace filter element and gasket.

i. Thoroughly lubricate snow machine (see Section 12).

j. Tighten all external bolts, nuts, and screws, and retorque spark plug to specified torque.

k. Check track tension and ski alignment (see Section 11).

l. Start engine and allow to warm up. Check track alignment (see Section 11).

m. Repeat test run on vehicle. Check carburetor low speed needle adjustment.

n. After engine has run sufficiently to indicate satisfactory condition, stop and restart it several times. Operate it at high and low speeds. Check acceleration from low to high speed.

o. Clean and dry snow machine thoroughly, before returning it to customer. Fog motor for storage using OMC-RC oil.

STATIC AIR LEAK CHECK

The objective of this test is to determine the condition of the rotor seals, rotor housing and side housings.

This is accomplished by pressurizing, one at a time, each of the three combustion chambers formed by the three rotor flanks, the side housings, and rotor housing, and then measuring the amount of leakage out of each combustion chamber. Air is supplied at a known reference pressure to an orifice of known diameter, and then to a test gage and the engine. The amount of air flow thru the test apparatus, and hence leakage, past the rotor seals may be judged by the pressure drop from the reference pressure, across the orifice, to the test pressure. See Figure 5-1.

The test apparatus is connected at (A) to an air supply greater than 60 psi. The pressure is regulated at (B) to 60 psi, the reference pressure, read on the reference pressure gage at (C). The air pressure is throttled, as it passes thru the orifice at (D), to the test pressure read on the test pressure gage at (E). The air flow thru the test apparatus is piped thru the swivel at (F) and thru the 12 m.m. adapter at (G) threaded into the spark plug hole and into the combustion chamber, from which it escapes by leaking past the side seals and apex seals of the chamber being tested.

TEST PROCEDURE

1. Screw 12 m.m. adapter (G) into spark plug hole with O-ring in place on adapter.

2. Turn flywheel so flywheel TDC mark is lined up with the thru bolt on the rotor housing minor axis as shown in Figure 5-2. Rotor is now at a minimum volume position.

△ SAFETY WARNING

Set this rotor position carefully with the flywheel index mark in position within ± 1/8" of the bolt center line or the engine may motor from air pressure and injure the careless operator.

3. Attach the fitting (A) to air supply and open regulating valve (B) until reference gage (C) reads about 60 psi.

△ SAFETY WARNING

Avoid moving the flywheel index mark beyond ± 1/8" from the minor axis bolt center line or the engine may motor. Use a wrench on the primary end cap bolt, flywheel nut or fan nut. Get a good hold on wrench when performing this operation. Never use hands to hold flywheel rim, or an injury may result.

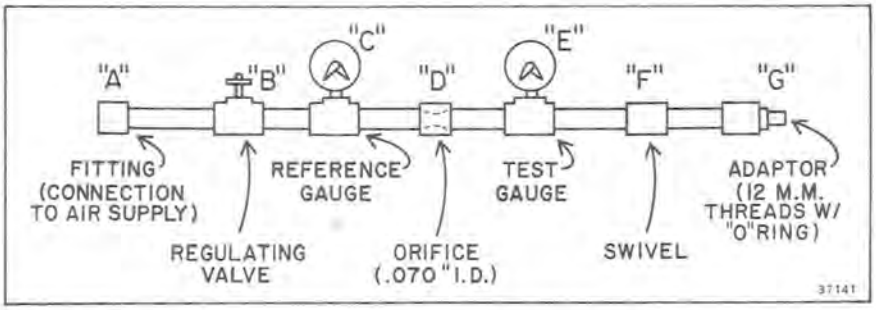

Figure 5-1

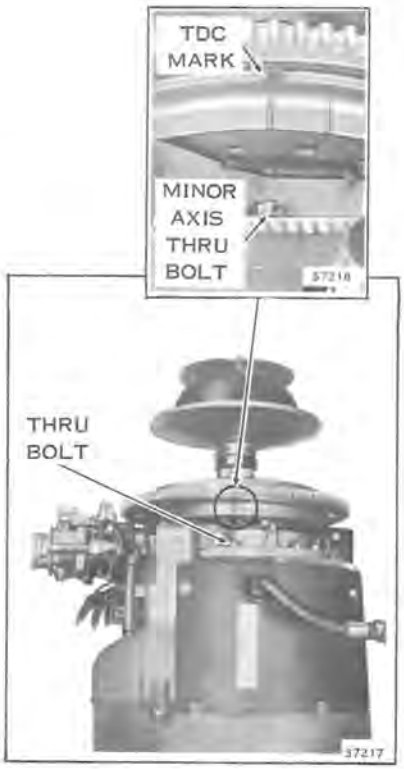

Figure 5-2

4. Wiggle the flywheel back and forth slightly (about 5°) until the seals "seat." The test gage pressure (E) may rise by 5 to 10 psi when the seals seat. This gives a more consistant reading.

5. Adjust the regulating valve (B) until reference gage (C) reads 60 psi.

6. Read test pressure on test gage (E) and record this reading.

7. Close regulating valve (B) or disconnect air supply at (A).

8. Turn the flywheel one revolution in the direction of normal rotation and carefully realign the index mark with the center line of the bolt on the minor axis.

9. Repeat steps #3 thru #8, two more times, recording test pressures for the remaining two combustion chambers.

ANALYZING TEST READINGS

The minimum pressure in the three chambers must not be less than 40 psi.

The maximum variation between any two chambers must not exceed 10 psi.

Three Low Readings

The condition most likely to be found if a performance fault is noted in the first few hours of operation is a scored side housing or rotor housing. This will affect all three readings equally. All three test pressure readings will usually be below 40 psi.

Two Low Readings

One of the two likely conditions if a performance fault is noted after the first few hours of operation. One damaged apex seal will affect the pressure readings for both combustion chambers next to the damaged seal. Two pressure readings will usually be below 40 psi and the third will be near normal (above 50 psi). This condition may result in either or both unacceptable test pressure patterns, i.e. the lowest reading below 40 psi and the variation between highest and lowest greater than 10 psi.

One Low Reading

This is the other likely condition if a performance fault is noted after the first few hours of operation. One damaged side seal will result in one low reading and two higher readings. The side seal damage may be caused by scuffing of the side housing surface or may cause scuffing of the side housing sealing surface and in these cases the two higher readings may also be below normal or even below the 40 psi minimum pressure.

Three Low (or Marginal) Readings

This condition would most likely be found in an engine that has operated under severe operating conditions or for very long mileage. All three test pressures will be generally low. This can be due to very high operating rpm, very heavy engine loads, ingestion of dirt, or very many hours and long mileage.

Any of the above pressure reading patterns may be due to a number of combinations of faults. In addition, stuck seals can occur thru over heating or use of improper lubricant which will give abnormal test readings similar to damaged seals. The actual problem can only be determined after the engine is disassembled and all parts are inspected.

CARBURETOR ADJUSTMENTS

HIGH SPEED JET

The high speed orifice is fixed. It should not be tampered with.

LOW SPEED NEEDLE VALVE AND IDLE ADJUSTMENT SCREW

(See Figure 5-3)

1. Pre-set "low speed needle valve" 2 turns open.
2. Turn "idle adjustment screw" to the left (counterclockwise) until throttle plate is completely closed and screw is not in contact with throttle lever.
3. Start engine and allow warm up time of 3 or 4 minutes. If engine will not idle, turn "idle adjustment screw" to right to keep engine running. After engine is warm, push choke knob in all the way.
4. Turn "idle adjustment screw" to attain the recommended idle speed of 1100-1400 rpm.
5. Optimize low speed needle adjustment and reset idle speed.
6. Accelerate engine, if a flat spot (hesitation to accelerate) is noted, readjustment of low speed needle is necessary. Turn "low speed needle" counterclockwise 1/8 turn at a time. Reset "idle adjustment screw" to attain 1100-1400 rpm each time low speed needle is adjusted.
7. Accelerate engine then release throttle, engine should return to idle speed. Turn low speed needle clockwise to reduce amount of fuel to the engine. Reset "idle adjustment screw" to attain 1100-1400 rpm each time low speed needle is adjusted.

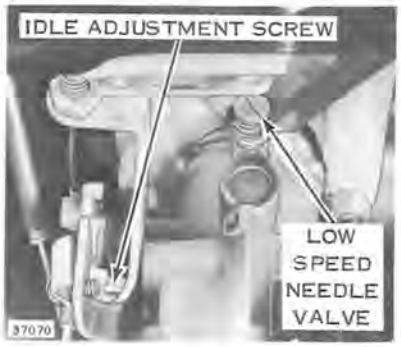

Figure 5-3

⚠ SAFETY WARNING

Operating above recommended idle rpm can result in neutral control not operating. If it is necessary to idle at above recommended rpm, check operation of neutral control to insure it is functioning properly. See page 3-6.

Figure 5-4

SPARK PLUG

Using the correct spark plug is most important for efficient operation. The recommended spark plug for your engine is Champion UP-77V.

Remove rubber covered spark plug terminal by pulling straight off, with a slight twist, see Figures 5-4 and 5-5. Remove spark plug for inspection or replacement as necessary.

NOTE

Care should be taken to avoid over torqueing the spark plug when the engine is hot. A spark plug installed in a hot engine above the torque figure below may be very difficult to remove when cold, and could result in damage to the rotor housing threads. Refer to page 2-3.

When reinstalling spark plug, clean the spark plug seat in rotor housing. Be certain gasket is in place on spark plug. Damage will occur to engine if gasket is omitted. Recommended torque is (12-15 ft. lbs. Cold) DO NOT EXCEED 15 FT. LBS. If 15 ft. lbs. is exceeded, severe engine damage will occur which may require replacement of rotor housing.

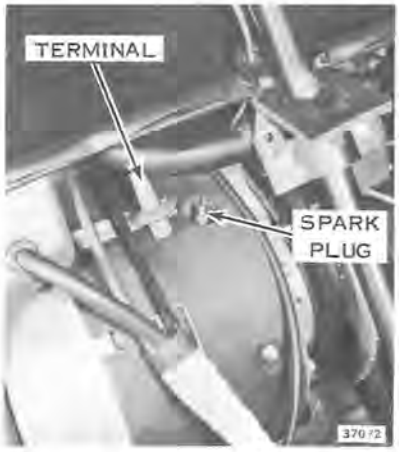

Figure 5-5

SECTION 6
FUEL SYSTEM

6

TABLE OF CONTENTS

DESCRIPTION 6-2

FUEL FLOW 6-2

CARBURETOR 6-2
- REMOVAL 6-3
- DISASSEMBLY 6-3
- CLEANING, INSPECTION AND REPAIR 6-5
- REASSEMBLY 6-6
- INSTALLATION 6-6

FUEL PUMP 6-7
- REMOVAL 6-7
- CLEANING, INSPECTION, AND REPAIR 6-7
- REASSEMBLY 6-7

FUEL PRIMER 6-8

AIR FILTER 6-8

FUEL TANK 6-8

FUEL LINE TIE STRAPS 6-9

DESCRIPTION

The complete fuel system consists of the gas tank assembly and lines, the primer assembly, the fuel pump and filter assembly and the carburetor. This section gives complete service procedures on all components of the fuel system, and carburetor adjustments. Principles of carburetion are discussed in Section 3.

FUEL FLOW

Fuel is drawn from the fuel tank by the fuel pump, which is operated by changes of pressure in the rotor chamber. These changes in pressure are transmitted to the fuel pump via the pulse line. The filter element removes dirt, or other impurities from the fuel before the fuel passes through the pump or carburetor. The primer assembly, operated from the control panel, injects raw fuel into the manifold before starting (see Figure 6-1).

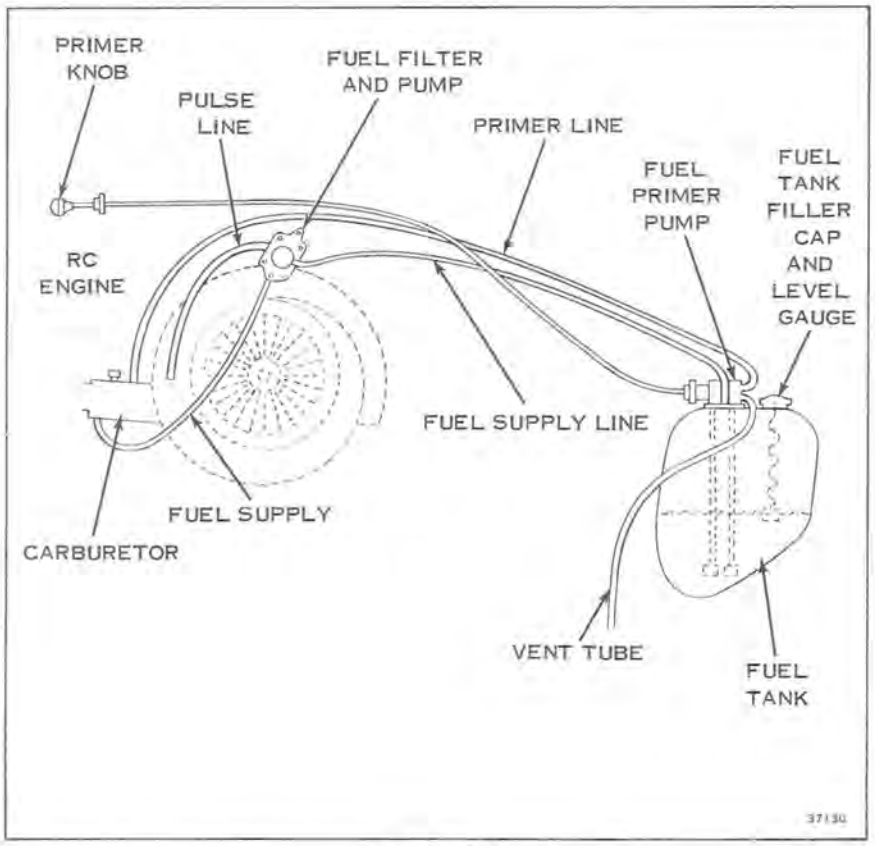

Figure 6-1

CARBURETOR

The carburetor used on this snowmobile is the OMC custom, float bowl type. The carburetor should be cleaned and inspected at regular intervals, depending on service conditions.

Clean the entire carburetor by flushing with fuel and blow dry with compressed air before disassembly. The carburetor should be inspected for cracks in the casting, bent or broken shaft, loose levers or swivels and stripped threads.

REMOVAL

a. Select a clean work area. Dirt and carelessness are the cause of most carburetor trouble.

b. Remove air silencer cover and filter element. See Figure 6-2.

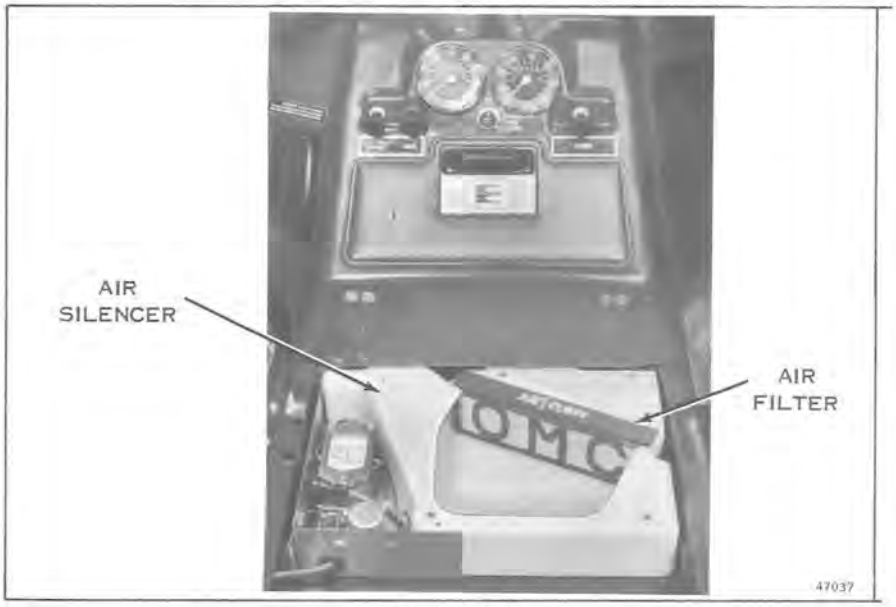

Figure 6-2

c. Remove choke and throttle cables from carburetor.

d. Cut tie strap and remove primer line. Remove throttle lever screw and throttle lever from carburetor to simplify removal of left flange nut. See Figure 6-3.

e. Remove two nuts and star washers securing carburetor to insulating block.

f. Shift carburetor a little and disconnect the lower end of the high performance throttle link from the nylon bushing. See Figure 6-3.

g. Lift carburetor and gasket out of compartment and disconnect fuel line from carburetor.

NOTE

Some solvents and cleaners have a damaging effect on the synthetic rubber parts used in carburetors. It is best to use a petroleum product for cleaning. Do not use alcohol, lacquer thinner, acetone, benzol or any solvent with a blend of these ingredients unless the rubber parts, float assembly and gaskets are removed. If you are in doubt about your solvent, test a used part in it and observe the reaction.

DISASSEMBLY (See Figure 6-4)

1. Remove low speed needle valve (1), spring (2) and washer (3).

2. Remove four screws (4) attaching float chamber (5) to carburetor body (6). Remove float chamber and gasket (7). Remove nylon hinge pin (8) to permit removal of float assembly (9).

3. Remove float valve (10), float valve seat (11) and gasket (12).

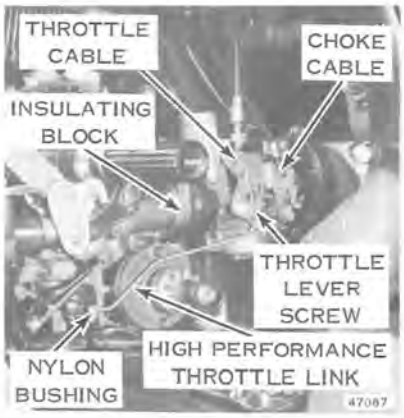

Figure 6-3

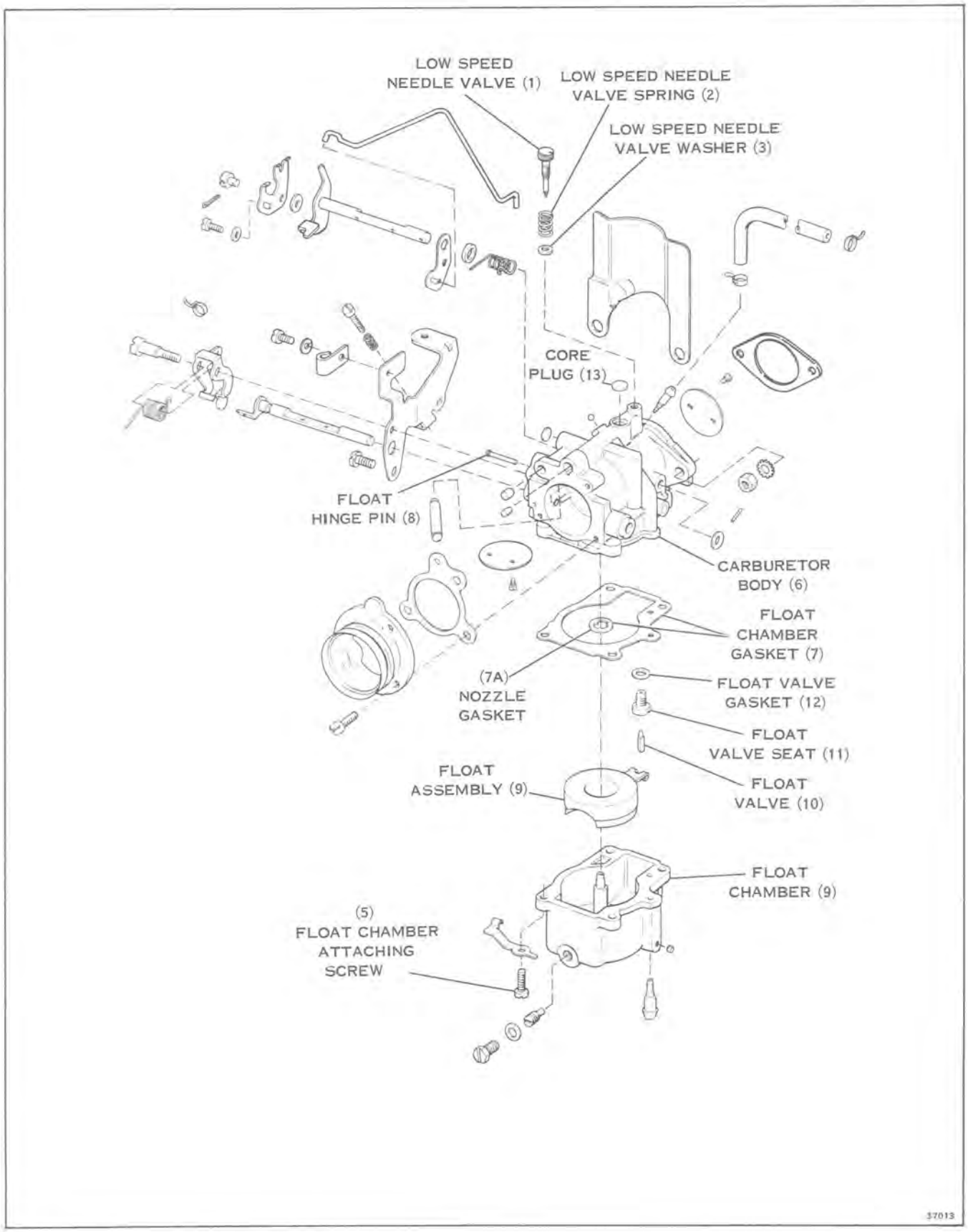
LOW SPEED
NEEDLE VALVE (1)
LOW SPEED NEEDLE
VALVE SPRING (2)
LOW SPEED NEEDLE
VALVE WASHER (3)
CORE
PLUG (13)
FLOAT
HINGE PIN (8)
CARBURETOR
BODY (6)
FLOAT
CHAMBER
GASKET (7)
(7A)
NOZZLE
GASKET
FLOAT VALVE
GASKET (12)
FLOAT
VALVE SEAT (11)
FLOAT
VALVE (10)
FLOAT
ASSEMBLY (9)
FLOAT
CHAMBER (9)
(5)
FLOAT CHAMBER
ATTACHING
SCREW
37013

Figure 6-4

CLEANING, INSPECTION AND REPAIR

General Instructions

Clean all parts, except float and float valve, in solvent and blow dry. DO NOT dry parts with a cloth as lint may cause trouble in the reassembled carburetor. Be sure all particles of gaskets are removed from gasket surfaces. Flush all passages in the carburetor body with solvent and remove any gummy deposits with OMC Accessory Engine Cleaner. Certain solvents will not remove this gum which accumulates particularly in the float chamber and on needle valve.

Float and Needle Valve

a. Inspect float and arm for wear or damage. Check float arm wear in the hinge pin and needle valve contact areas. Replace if necessary.

b. Inspect the inlet needle valve for grooves, nicks, or scratches. If any are found, replace float valve assembly. See Figure 6-5. Gum or varnish on the needle valve must be removed with OMC Accessory Engine Cleaner. DO NOT attempt to alter the shape of the needle valve.

c. Check the needle valve seat with a magnifying glass; if seat is nicked, scratched, or worn out-of-round, it will not give satisfactory service. See Figure 6-6. The valve seat and needle are a matched set; if either is worn, both parts must be replaced. Use a new gasket when reinstalling the needle seat.

Needle Valves

a. Inspect the tapered end of the needle valve for grooves, nicks, or scratches; replace if necessary. See Figure 6-7.

b. DO NOT attempt to alter the shape of the needle valve.

Carburetor Body

a. Clean out all the jets and passages, and the venturi, making sure no gum or varnish deposits remain. DO NOT PUSH DRILLS OR WIRES INTO THE METERING HOLES. Dry after cleaning with compressed air. Keep clean for final reassembly.

b. Check all gasket surfaces for nicks, scratches, or distortion. Slight irregularities can be corrected with the use of a surface plate and emery cloth.

c. Check throttle and choke shafts for excessive bearing play. Check operation of choke and throttle valves to be sure they correctly shut off air flow, yet move freely without binding. Replace carburetor body if valves or shafts are excessively worn or damaged.

NOTE

The threaded ends of the choke and throttle valve attaching screws are staked during carburetor assembly to prevent loss during operation. Disassembly of these valves is possible, but replacement of the carburetor body is recommended.

Core Plugs

If necessary, remove core plug (13, Figure 6-4) to clean out low speed orifice holes with compressed air and solvents only.

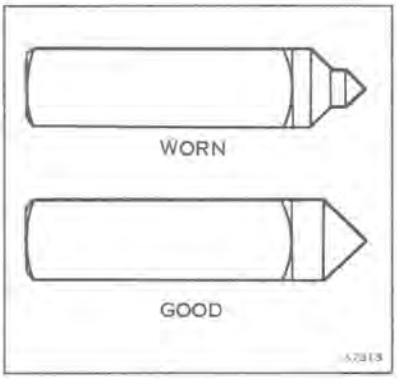

Figure 6-5

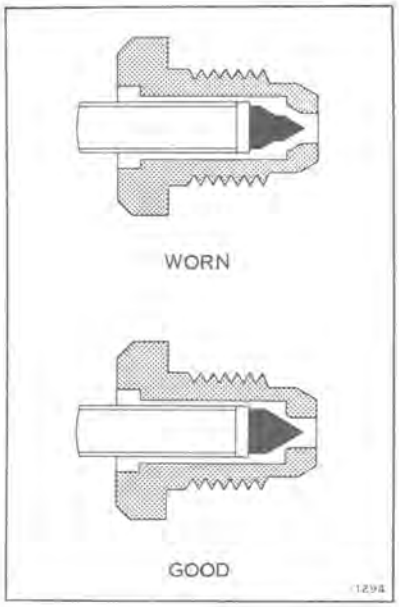

Figure 6-6

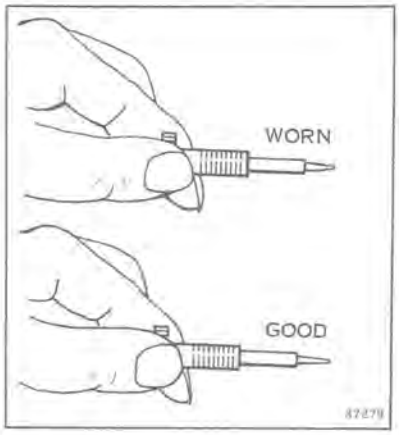

Figure 6-7

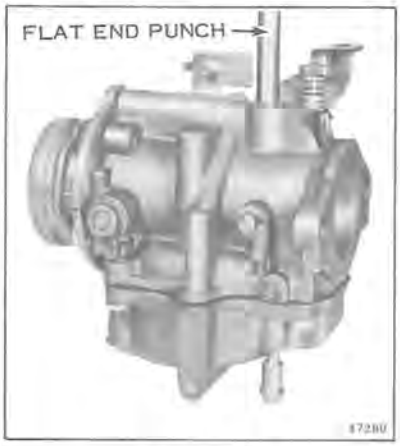

Figure 6-8

If leakage occurs at a core plug area, follow these steps:

a. If leakage is slight, a smart tap with a hammer and flat end punch in the center of the core plug will normally correct this condition. See Figure 6-8.

b. If leakage persists, drill a 1/8 inch hole through the center of the core plug to a depth of not more than 1/16 inch below its surface. With a punch carefully pry out the core plug. See Figure 6-9.

c. Inspect and clean casting contact area; if nicks, scratches, or an out-of-round condition exist, the casting will have to be replaced. If the casting opening is normal, apply a bead of OMC Adhesive M Part No. 318535 to the outer edge of a new core plug and place the new core in the casting opening, convex side up. Flatten to a tight fit with a flat end punch and hammer. Check for leakage.

REASSEMBLY OF CARBURETOR

General Instructions

Reassemble the carburetor, paying particular attention to the following procedure. Keep all dust, dirt, and lint out of the carburetor during reassembly. Be sure that parts are clean and free from gum, varnish, and corrosion when reassembling them. Replace all gaskets and "O" rings. DO NOT attempt to use original gaskets and "O" rings because leaks may develop after the engine is back in use.

Figure 6-9

Float and Float Chamber (see Figure 6-4 for callouts)

a. Install new carburetor bowl gasket and nozzle gasket (7A). Replace float valve seat (11) and gasket (12), float valve (10), float (9), and hinge pin (8).

b. Check for correct positioning of float. Turn carburetor body upside down so weight of float closes needle. Top of float should be parallel and 1/16" above gasket surface. See Figure 6-10.

c. Reassemble float chamber (5) to carburetor body (6).

Low-Speed Needle

Install the low-speed needle and spring, turning in carefully with finger pressure until it comes lightly against the seat, then back off 2 turns open. CAUTION should be taken to prevent jamming the needle against the seat. See Section 5 for adjustment procedure.

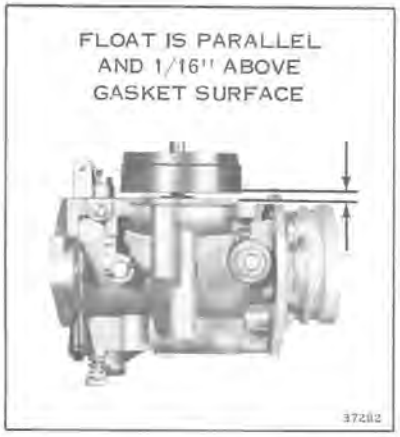

Figure 6-10

Choke

Check the choke for free operation. Choke valve must move freely, without binding.

INSTALLATION OF CARBURETOR TO ENGINE

a. Replace fuel supply line and primer line, using new tie straps. See "FUEL LINE TIE STRAPS".

b. Snap lower end of high performance throttle link in nylon bushing.

c. Assemble carburetor gasket between insulating block and carburetor.

d. Secure carburetor to insulating block with two nuts and star washers. Assemble throttle lever to shaft with screw. High performance throttle link must be at (as shown in Figure 6-11) edge of throttle lever slot with both the carburetor throttle and the high performance throttle closed. The carburetor throttle lever should turn about 15° before the slotted lever engages the high performance throttle link.

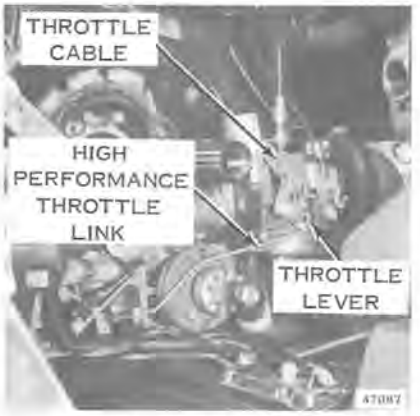

Figure 6-11

FUEL PUMP

REMOVAL (See Figures 6-12 and 6-13)

a. Disconnect two hoses from fuel pump and filter assembly.

b. Remove two screws attaching pump and filter assembly to air duct and remove pump and filter assembly. NOTE: Filter assembly may be removed for cleaning and inspection without removing pump assembly by removing filter cap screw.

⚠ SAFETY WARNING

Do not allow fuel to drip on hot engine or exhaust manifold because of potential fire hazard.

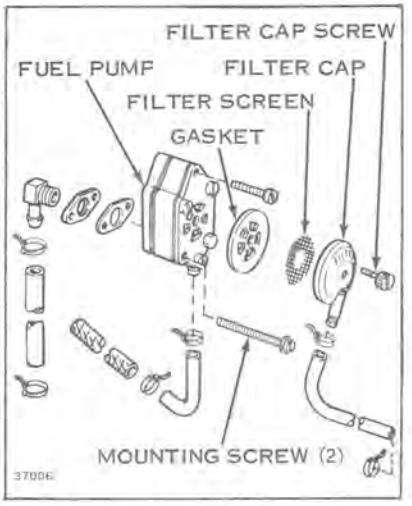

Figure 6-12

CLEANING, INSPECTION, AND REPAIR (See Figures 6-12 and 6-13)

a. The fuel pump components are not serviced separately. If a malfunction occurs, replace the complete pump.

b. Inspect the filter for accumulation of sediment by removing the filter cap screw and the filter cap. Clean the filter cap and fuel connectors in solvent and blow dry.

c. Check for a clogged filter screen. The fuel filter screen on an engine that has been in storage may be clogged without appearing to be. During storage, volatile agents as well as anti-gum and anti-varnish agents evaporate from the gasoline that remains in the fuel filter. The result is contamination of the filter screen with a clear form of varnish. This varnish is not readily soluble in gasoline or cleaning solvent; therefore, the filter should be replaced at the start of each season. NOTE: Since the purpose of the filter is not only to trap dirt but also to prevent moisture from entering the carburetor, do not attempt to run the engine with the filter removed.

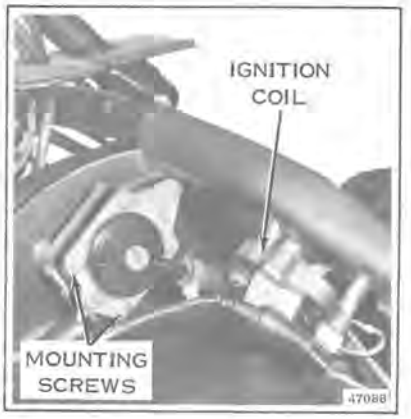

Figure 6-13

REASSEMBLY

a. Reassemble the fuel filter. Do not overtighten filter cap to fuel pump body.

b. Attach fuel pump and filter assembly to plate with screws.

c. Reconnect fuel hoses and secure with new tie straps per procedure below.

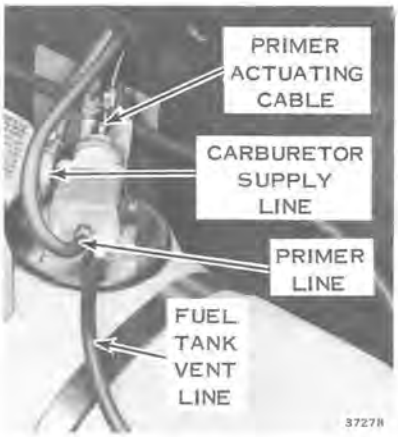

Figure 6-14

FUEL PRIMER

a. The primer is a simple pump which pumps raw fuel from the fuel tank, directly into the carburetor, forward of the throttle plate, then into the intake manifold. See Figure 6-14.

b. To check operation of the primer, disconnect primer line from carburetor. A spurt of fuel should be evident when the plunger is depressed. If little or no fuel is discharged, check for crimped primer line, dirt in check valve diaphragm or bad pump diaphragm. See Figure 6-15.

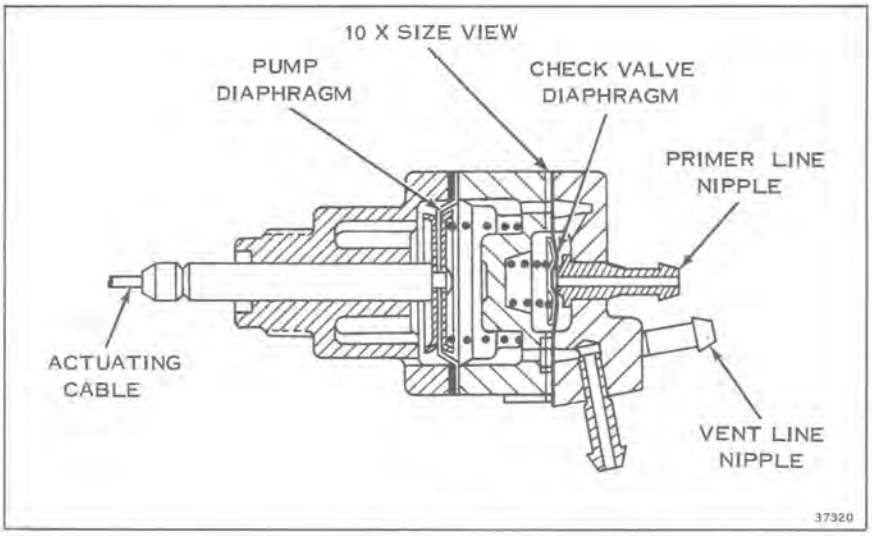

Figure 6-15

c. Primer cable should be adjusted for 1/4" stroke of primer pump when primer knob is depressed fully. Loosen cable clamp at pump to make this adjustment, then tighten securely.

Figure 6-16

AIR FILTER

The carburetor is equipped with an air filter that should be cleaned during the operating season. To remove air filter, remove four screws and air silencer cover. See Figure 6-16. Loosen wing nuts located forward of air silencer. Air filter can now be lifted out of air silencer. Shake the filter to clean it. When it can no longer be cleaned in this manner, replace it. Never run engine without an air filter. It is essential for proper carburetor calibration.

FUEL TANK

a. For correct fuel and lubricant mixtures and break-in instructions, see Section 12.

b. The importance of using a fresh clean fuel mixture cannot be overstressed. Gum will form in old fuel which will clog filter screens, fuel passages, carburetor orifices, and check valves.

c. To disconnect tank for cleaning, remove screws from hold down straps, primer actuating cable, carburetor supply line, and fuel vent and primer lines from primer pump. Tank can now be lifted out past the heat shield. See Figures 6-14 and 6-17.

d. Clean the tank by pouring some gasoline into the tank through a filtering funnel. Shake the tank and contents and empty the contents through the fill opening. Replace tank and reconnect straps, primer actuating cable, fuel lines and vent line.

e. Check to see that there are no leaks at fuel line connections.

f. Re-adjust primer cable. See FUEL PRIMER.

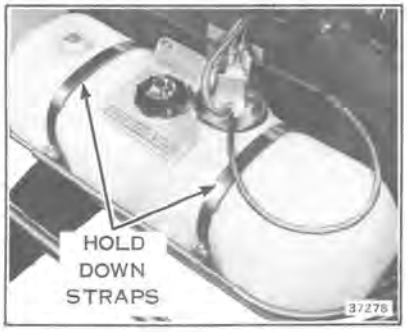

Figure 6-17

FUEL LINE TIE STRAP

a. Fuel line tie strap, part no. 262081 must be replaced with a new strap after its removal. (Best method of removing tie strap is to twist head of tie strap with pliers.)

b. Assemble the new strap around the fuel line with the serrated side toward the inside. See Figure 6-18.

c. Snug up the head on the strap per Figure 6-19.

d. Tighten head on strap with pliers as illustrated in Figure 6-20.

Figure 6-18

Figure 6-19

Figure 6-20

SAFETY WARNING

Never remove a fuel hose without first removing the tie rap clamp. Never attempt to install a fuel hose with a tie rap pre-assembled. Always assemble the tie rap after the fuel hose is assembled to the nipple. Improper assembly could result in a leak. All reassembled tie raps should be located in the original assembled location.

SECTION 7
IGNITION AND ELECTRICAL SYSTEMS

TABLE OF CONTENTS

DESCRIPTION 7-2

TEST EQUIPMENT 7-3

C.D. IGNITION SYSTEM TROUBLE SHOOTING 7-3
- INTRODUCTION 7-3
- DO'S AND DON'TS 7-3
- TEST #1 IGNITION COIL OUTPUT CHECK 7-5
- TEST #2 IGNITION SWITCH CHECK . . 7-5
- TEST #2A IGNITION SWITCH CONTINUITY CHECK 7-6
- TEST #3 POWER PACK RB OUTPUT CHECK 7-7
- TEST #4 CHARGE COIL OUTPUT CHECK 7-8
- TEST #5 IGNITION SENSOR COIL INPUT CHECK 7-9
- TEST #6 IGNITION SENSOR COIL RESISTANCE CHECK 7-10
- TEST #7 CHARGE COIL RESISTANCE CHECK 7-11
- TEST #8 IGNITION COIL CONTINUITY, POWER AND INSULATION CHECKS . 7-11

ALTERNATOR 7-13
- TROUBLE SHOOTING 7-13
- ALTERNATOR COIL RESISTANCE TESTS 7-13
- IGNITION KEY SWITCH CHECK 7-13
- ALTERNATOR COIL OUTPUT TEST . 7-14
- STOP SWITCH TEST 7-14
- DIMMER SWITCH TEST 7-14
- BLOCKING DIODE TEST 7-14
- BRAKELAMP SWITCH TEST 7-14
- CHECKING RECTIFIER DIODES 7-14

IGNITION SYSTEM REPAIR 7-15
- DISASSEMBLY 7-15
- REASSEMBLY 7-15

IGNITION TIMING 7-16

SPARK PLUGS 7-16

BATTERY 7-16
- DESCRIPTION 7-16
- SPECIFICATIONS 7-17
- INSTALLATION 7-17
- BATTERY SERVICING 7-18
- BATTERY CARE 7-18
- BATTERY TESTING 7-19
- BATTERY CHARGING 7-19
- SLOW CHARGING 7-19
- PRESTOLITE BATTERY WARRANTY . 7-19

STARTER SYSTEM 7-20
- DESCRIPTION 7-20
- MAINTENANCE 7-20
- STARTER SYSTEM TESTING 7-20
- STARTER CIRCUIT TESTING 7-20
- STARTER MOTOR TESTING 7-21
- INSPECTION OF STARTER MOTOR . . 7-22

ALTERNATOR 7-23
- TROUBLE SHOOTING 7-23
- ALTERNATOR COILS 7-23
- ALTERNATOR AND CHARGE COIL REPLACEMENT 7-23
- HEADLAMP ADJUSTMENT 7-24
- PEAK VOLTAGE TEST (USING MERC-O-TRONIC KILOVOLT METER MODEL 172) 7-24

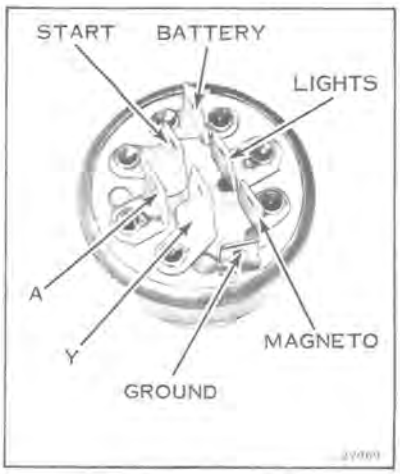

Figure 7-1

Figure 7-2

Figure 7-3

DESCRIPTION

The ignition system is made up of the following major components:

1. Flywheel assembly
2. Sensor rotor
3. Stator and charge coil assembly
4. Sensor assemblies (ignition and overspeed)
5. Power Pack RB assembly
6. Ignition coil

The electrical system consists of the alternator coils, headlamp, taillamp, stoplamp, ignition switch, kill button, dimmer switch, wiring, storage battery, electric starting motor, starter solenoid, and rectifier. The alternator coils produce alternating current which changes in frequency and voltage in proportion to engine speed. This alternating current output is rectified (changed to direct current) by a full wave diode bridge rectifier and used to charge the battery. Direct current is then used to power the headlamp and taillamp and the electric starter motor. See wiring diagram at the end of manual.

IGNITION

The magneto capacitor discharge (C.D.) ignition system generates a high voltage electric current which jumps the spark plug gap and thus ignites the compressed fuel-air mixture.

The following sequence of events will illustrate how this system works.

The flywheel rotates around the stator and charge coil assembly. (See Figure 3-7.) The magnets in the flywheel and the (2) charge coils generate a voltage. This voltage (A.C.) flows into Power Pack RB. Here it is changed to D.C. and stored in a capacitor. At the same time the sensor rotor rotates by the sensor coil and a smaller A.C. voltage is generated. This smaller voltage flows into Power Pack RB and causes an electronic switch in the Power Pack RB to turn on allowing the voltage stored in the capacitor to discharge into the primary of the ignition coil.

LIGHTING SYSTEM

The lighting system coils produce alternating current which changes in frequency and voltage in proportion to the engine speed.

The alternating current output is converted to direct current by a diode bridge rectifier and used to charge the battery. Direct current from the battery is then used to power the headlight, taillight, and the electric starter motor.

The alternator output is automatically increased to maximum charge when lights are turned on.

Figure 7-4

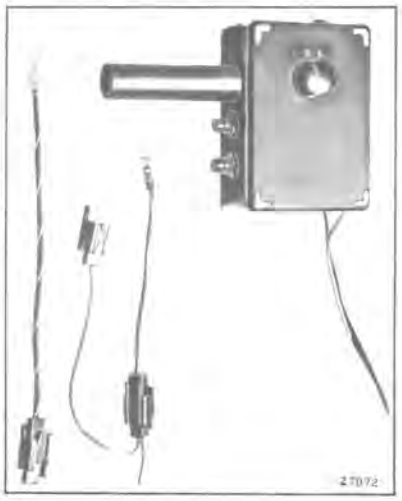

Figure 7-5

TEST EQUIPMENT

The test procedures outlined in this section require the use of the following equipment.

1. Multimeter (see Figure 7-2) or an ohmmeter.
2. Needle point spark checker, gap set to 7/16". See Figure 7-3.
3. Neon test light M-80 (Figure 7-4) or S-80 (Figure 7-5).
4. Timing light. See Figure 7-6.
5. Ignition coil analyzer. See Figures 7-7, 7-8 and 7-9.
6. A.C.-D.C. meter. See Figure 7-9A.
7. Peak reading Kilovolt meter model 172 MERC-O-TRONIC. See Figure 7-9B (OPTIONAL).

NOTE

DO NOT use a test instrument having more than a 12 volt source to check rectifier diodes.

Figure 7-6

Figure 7-7

Figure 7-8

C.D. IGNITION SYSTEM TROUBLE SHOOTING

INTRODUCTION

An understanding of the theory of the C.D. ignition system is an invaluable asset in following the C.D. ignition trouble shooting procedure. See Section 3 for a discussion of the C.D. ignition theory. All the following tests can be conducted without the removal of the flywheel.

C.D. IGNITION SYSTEM DO'S AND DONT'S

1. Do make sure that all connections are clean and tight, especially ground connections. Poor connections mean problems.
2. Do make sure that all plug-in connectors are fully engaged and free of corrosion. Loose or corroded connectors mean problems.
3. Do make sure that all wiring is located properly so there is no chance of rubbing against any edges that can cause wear and insulation breakdown. This can create a difficult service problem.
4. Do make sure test equipment is in good working order before trouble shooting the system. Poor test equipment will not solve a problem.
5. Do use proper tools when working on system components. Wrong tools could damage components.

Figure 7-9B

Figure 7-9A

Figure 7-9

SAFETY WARNINGS (6 AND 7)

6. Do return key switch to OFF position after each test before touching any system leads. This will discharge capacitor in Power Pack RB and prevent a possible high voltage electric shock.
7. Don't hold spark plug wire in your hand while checking for spark. A severe electrical shock could result. Use insulated pliers designed for this purpose.
8. Don't remove potting compound from Power Pack, as this will void any warranty.
9. Don't pull on high tension lead at the ignition coil. You might break the insulation or connection.
10. Don't open or close any plug-in connectors while the engine is running. You might cause damage to the system.
11. Don't attempt any tests other than those listed in the trouble shooting procedure. You might cause damage to the system.
12. Don't connect an electric tachometer into ignition system. You might damage the system.
13. Don't connect this system to any voltage source other than what is specified. You might damage the system.

NOTE

When connecting test equipment leads or reconnecting engine wiring leads to Power Pack RB always refer to the diagram provided. You must connect leads in correct locating or possible damage to system will result.

When removing Power Pack RB cover plate, make sure you place it alongside Power Pack RB in same direction it was removed.

NOTE

Always disconnect positive battery lead when making continuity checks.

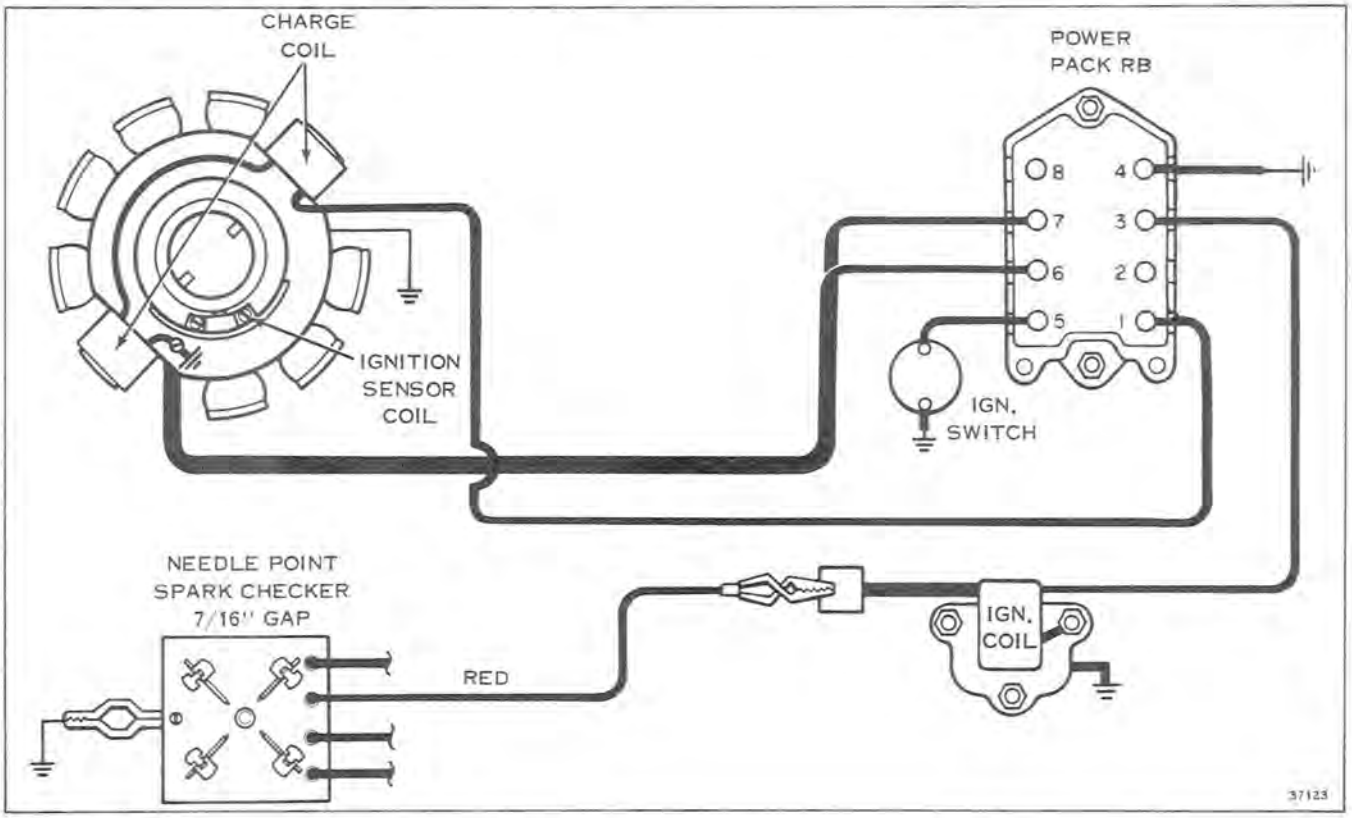

Figure 7-10

NOTE

The following are the recommended test procedures. This will assure correct terminal identification. Also, replace black (ground) wire and nut to Power Pack RB after cover is removed before conducting following tests.

NOTE

When connecting neon test light lead to Power Pack RB be sure to use spade terminal to ensure good connection.

NOTE

Ignition Test Recommendations are as follows:

TEST #1 IGNITION COIL OUTPUT CHECK

A. Pull high tension lead off spark plug.
B. Connect spark gap checker with 7/16" gap. See Figure 7-10. Remove spark plug. (See optional Kilovolt Test page 7-26.)
C. Crank engine with starter. If cranking manually, put ignition switch in "Run" position and use rewind starter. See Figure 7-10.
   1. Strong steady spark from ignition coil, system is good. Check spark plug. Then refer to fuel system section.
   2. Weak, erratic or no spark from coil, go to next test (#2).

TEST #2 IGNITION SWITCH CHECK

A. Put ignition switch in "Run" position for manual cranking. Crank engine with starter (or recoil starter) and observe spark.
B. If weak, erratic, or no spark, disconnect ignition switch lead on Power Pack terminal #5. See Figure 7-11. Repeat test, cranking engine with rope.
C. If spark is strong and steady, check leads going to ignition switch for grounds and perform ignition switch continuity check, test #2-A.

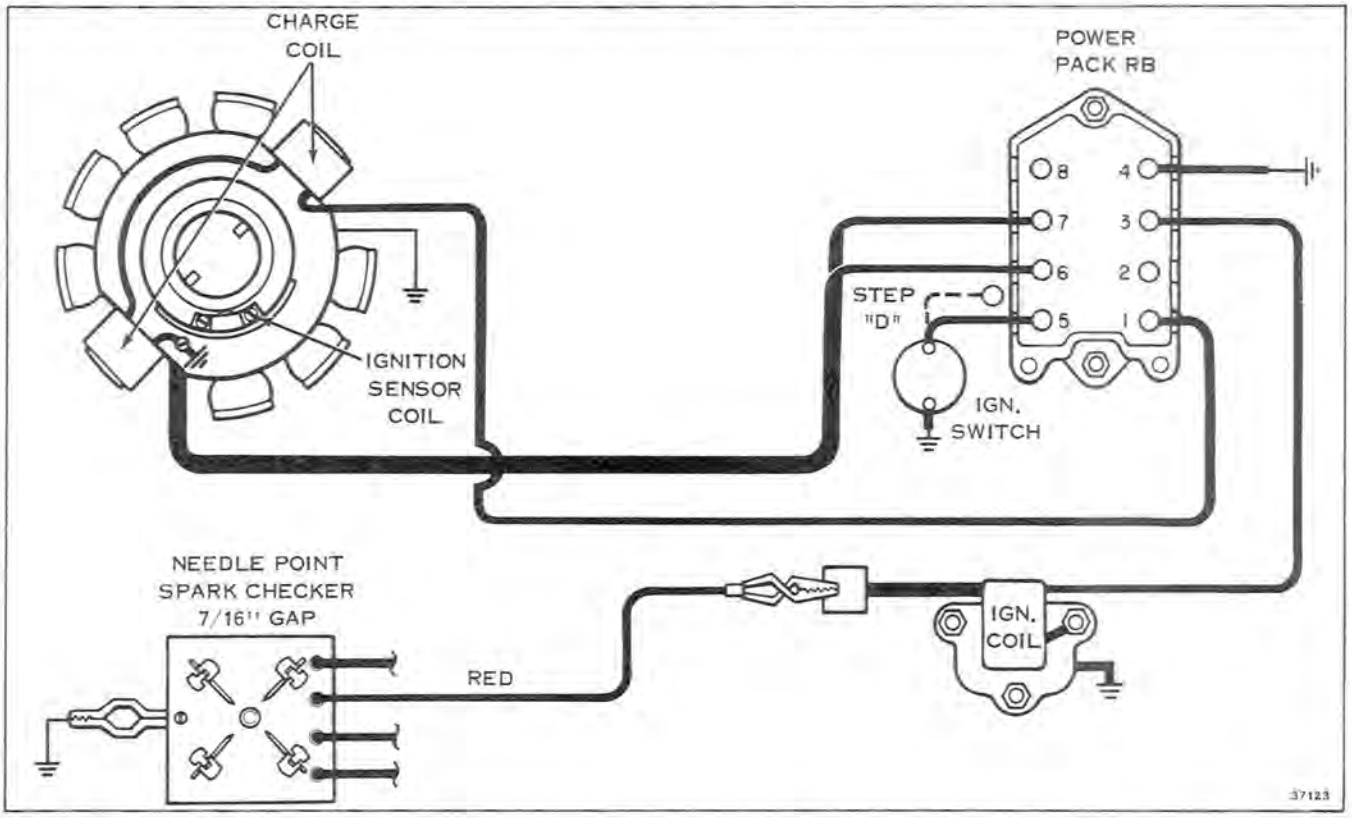

Figure 7-11

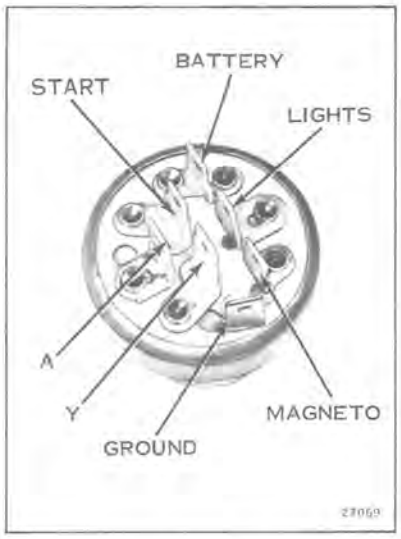

Figure 7-12

TEST #2A IGNITION SWITCH CONTINUITY CHECK

A. Disconnect orange/black lead from Power Pack terminal #5. See Figure 7-13.

B. With ignition key in "RUN" position, check from orange/black lead to engine ground with ohmmeter set on Hi ohm scale. There should be an infinite reading on the meter indicating ignition switch not shorted and lead not grounded.

C. If less than 500k ohm reading, remove terminal connectors from ignition switch (see Figure 7-12) and remove ignition switch from dash panel. Turn ignition key to "RUN" position and take a resistance reading across the magneto and ground terminal of the ignition switch. See Figure 7-12. Use high ohm scale for test #2A.

D. If infinite reading indicated find problem in orange/black stripe lead.

E. If less than 500k ohm reading indicated, replace ignition switch.

F. Reconnect key switch lead to terminal #5 on Power Pack RB.

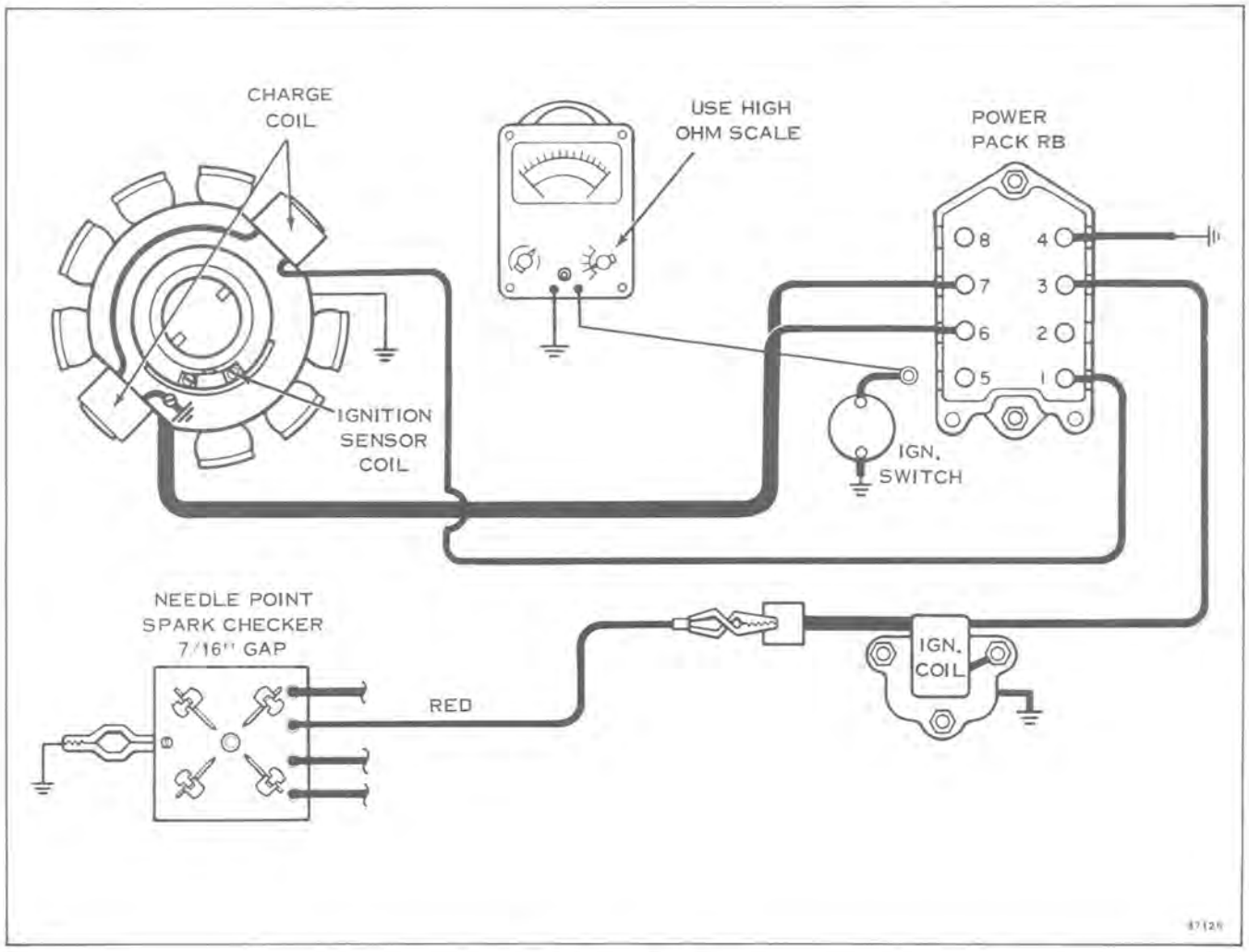

Figure 7-13

TEST #3 POWER PACK RB OUTPUT CHECK

A. Remove ignition coil orange primary lead from terminal 3 of Power Pack RB.

B. Use neon tester S80 or M80. Set rotary switch on tester to position #1. Hook tester black lead to Power Pack RB terminal #3, and tester blue lead to engine ground. See Figure 7-14.

C. Put ignition switch in "RUN" position for manual cranking.

D. Depress load button "A" and crank engine with starter (or recoil starter) and observe neon light. See Figure 7-14.

1. If light, check ignition coil, test #10.

2. If no light, reconnect ignition coil primary lead to terminal #3 on Power Pack RB and go to next test #5.

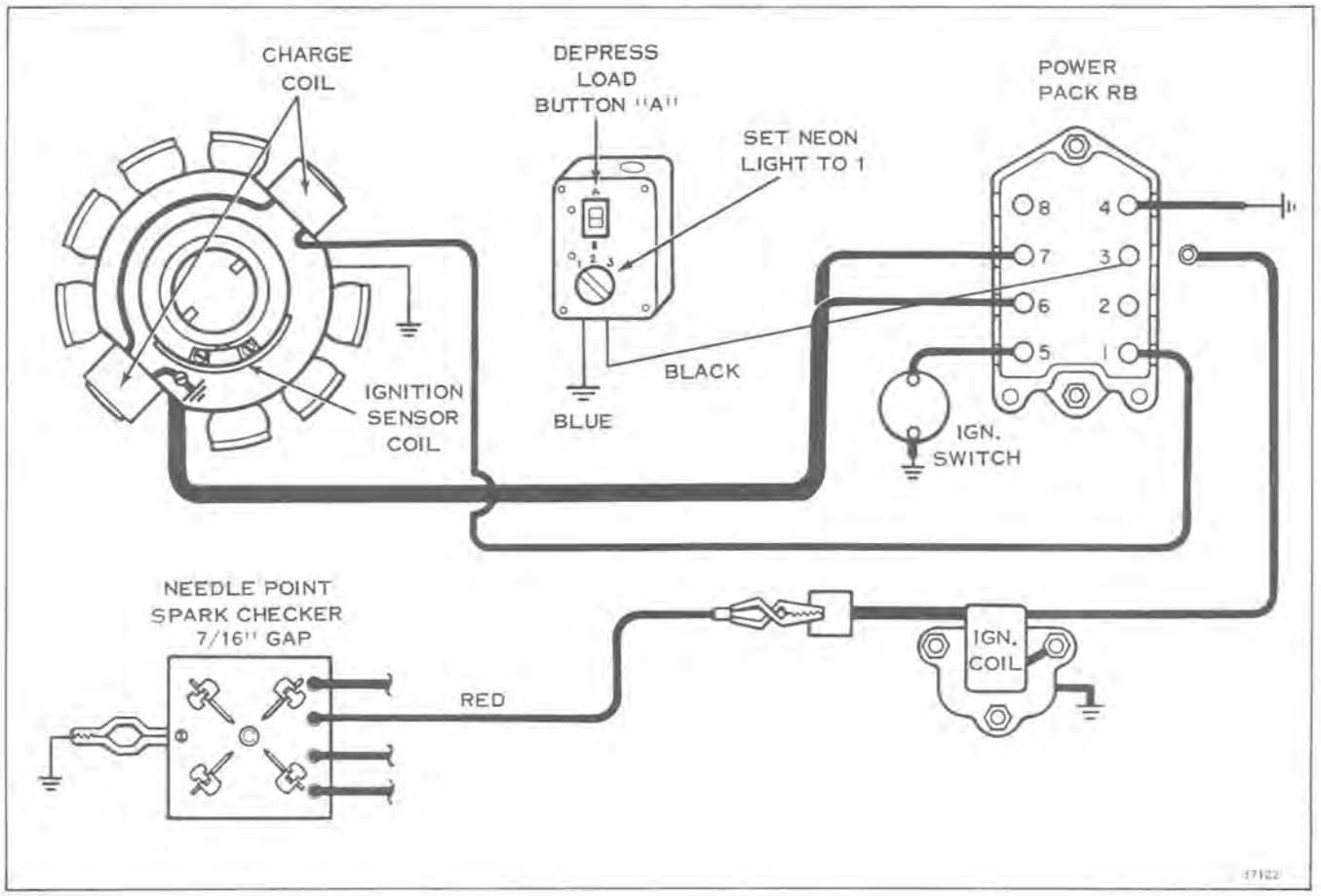

Figure 7-14

TEST #4 CHARGE COIL OUTPUT CHECK

A. Remove charge coil lead from Power Pack terminal No. 1.

B. Use Neon tester S80 or M80. Connect neon tester black lead to charge coil brown/white stripe lead and tester blue lead to engine ground. See Figure 7-15.

C. Put ignition switch in "RUN" position for manual cranking.

D. Set neon tester rotary switch to position #2. Depress load button "B."

E. Crank engine with starter (or recoil starter) and observe tester neon light. See Figure 7-15.

1. If light, charge coils are good.

2. If no light, check for grounding or open leads to charge coils. Also check charge coils for correct resistance (Test #9).

F. Reconnect charge coil lead to terminal #1 on Power Pack RB.

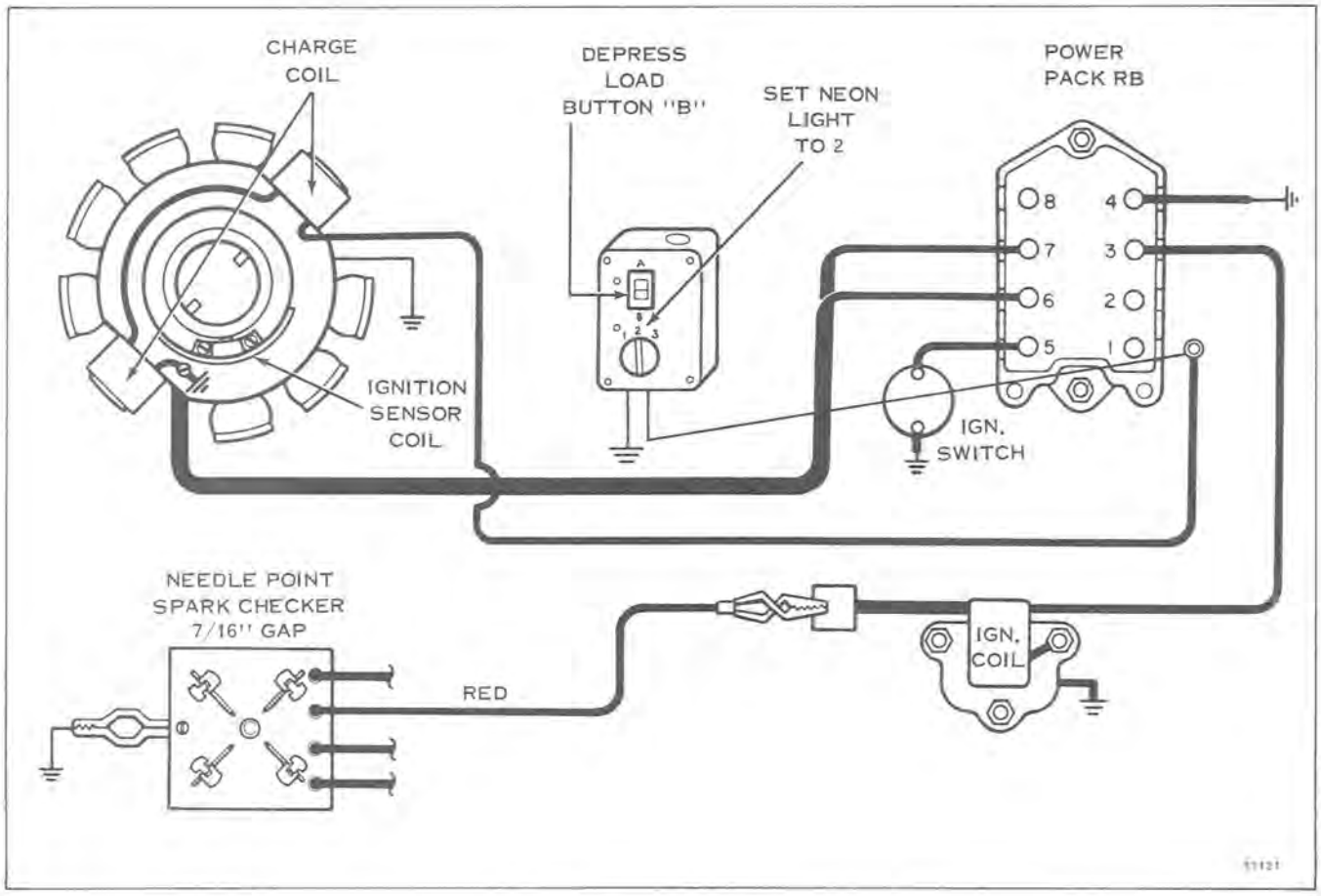

Figure 7-15

TEST #5 IGNITION SENSOR COIL INPUT CHECK

A. Remove ignition sensor white/green stripe lead from terminal #6 and black/white stripe from terminal #7 of Power Pack RB. (Do not allow leads to touch ground.)

NOTE

Test voltage output of S80 or M80. Battery output must be above one volt.

S80 or M80 Internal Battery Test

1. Set rotary switch to position #3.
2. Use a voltmeter.
3. Connect positive lead of voltmeter to black lead of S80 or M80.
4. Connect negative lead of voltmeter to blue lead of S80 or M80.
5. Depress load button "B" on S80 or M80 output must be above one volt.

B. Connect S80 or M80 tester black lead to Power Pack RB terminal #6 and blue lead to terminal #7. Set tester selector switch to position #3.

C. Put ignition switch in "Run" position for manual cranking.

D. Crank engine with ignition switch or rope, and at same time rapidly tap neon tester load button "B." See Figure 7-16.

1. If there is spark across gap, check ignition sensor leads for shorting to ground and check ignition sensor coil for correct resistance; test #7.
2. If there is no spark from coil, Power Pack is defective.

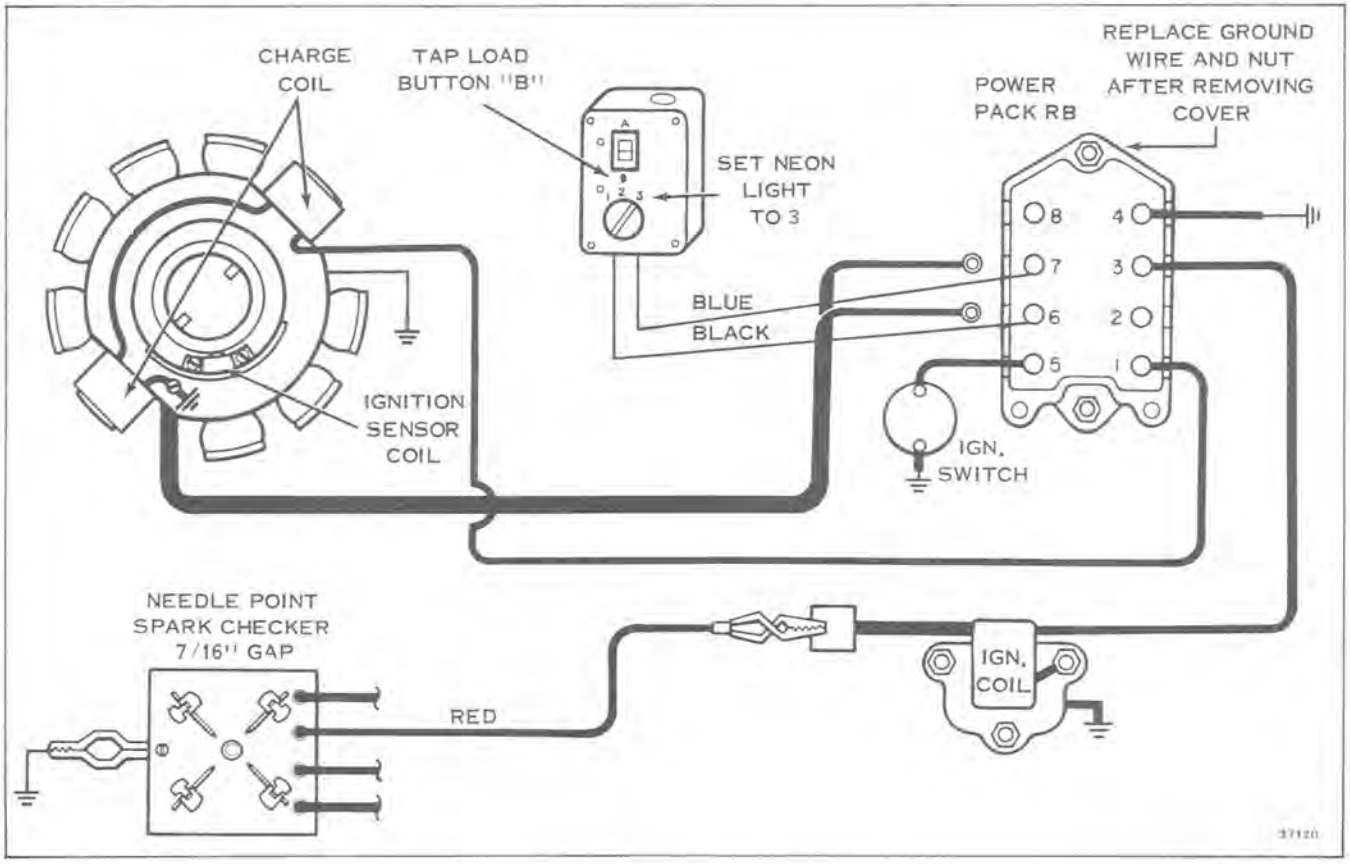

Figure 7-16

TEST #6 IGNITION SENSOR COIL RESISTANCE CHECK

A. Remove the white/green stripe lead from terminal #6 and the black/white stripe lead from terminal #7. Check for 26 to 30 ohms resistance between leads #6 and #7. See Figure 7-17. If ignition sensor coil resistance does not come within these tolerances, it must be replaced. Check on low ohms scale.

B. Ignition sensor coil or lead must not be shorted to ground. On ohmmeter high ohms scale, check for a reading of infinity from both coil leads to ground. If there is a leakage to ground, check sensor coil and leads and insulate area of leakage with tape, or replace ignition sensor and lead assembly.

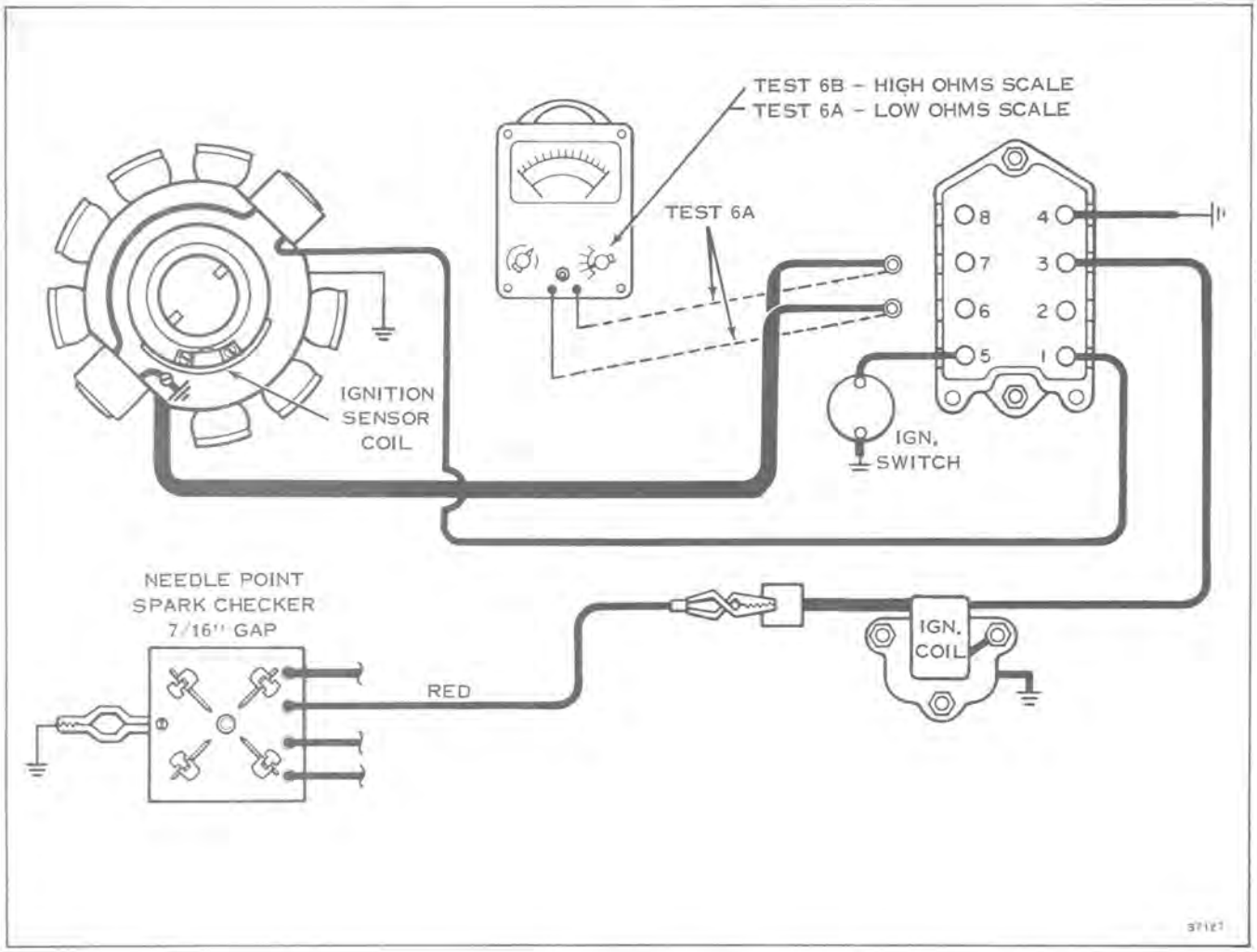

Figure 7-17

TEST #7 CHARGE COIL RESISTANCE CHECK

A. Remove the brown/white stripe lead from Power Pack RB terminal #1. Check for a total resistance of the two charge coils from lead to ground of 875 ± 75 ohms. See Figure 7-18. If resistance of the charge coils does not come within these tolerances, they must be replaced.

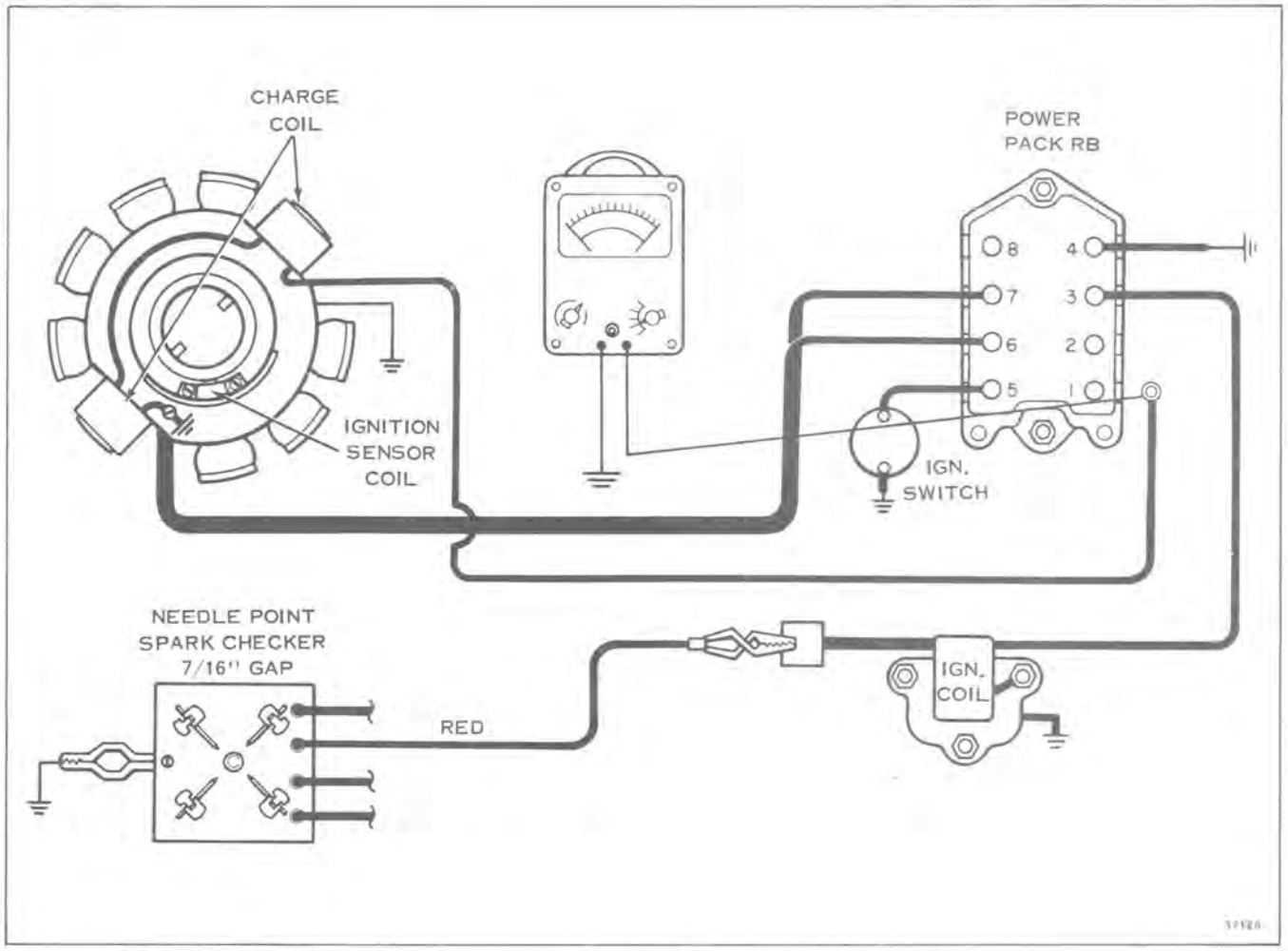

Figure 7-18

TEST #8 IGNITION COIL CONTINUITY, POWER AND INSULATION CHECKS

To determine accurately the condition of the ignition coil, an ignition analyzer should be used. Without the use of test equipment, coil may be replaced needlessly. A wide variety of ignition analyzers are available from various manufacturers. In addition, some automotive testers having the proper specifications can be used. The use of the Graham, Merc-O-Tronic, or Stevens ignition analyzers, and their adapter for C.D. ignition are particularly recommended. See Figures 7-7, 7-8 and 7-9.

Detailed instructions for the use of any tester are provided with the unit; therefore, only general information is given here. All components of the ignition system should be checked, even though replacing a single part seems to have corrected the trouble.

Figure 7-18A

The following values are provided for checking the ignition coil 581024.

Graham Tester Model 51

Maximum Secondary	3,000
Coil Index	60
Minimum Coil Test	9
Gap Index	50

Merc-O-Tronic

Secondary Continuity	22 to 26 (index number)

Stevens Tester Model MA75

Switch A Index Reading	20

Figure 7-19

SAFETY WARNING

Perform all tests on a wooden or insulated bench top to prevent leakage or shock hazards. Follow the equipment manufacturer's instructions. A low reading on the tester indicates a weak coil which must be replaced. No attempt should be made to improve this spark by increasing primary current; a coil is defective if it cannot be made to give a good reading on the specified primary current.

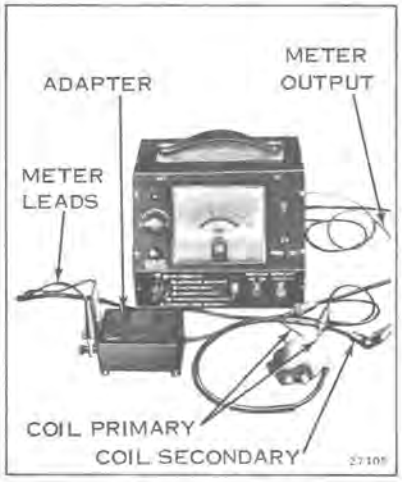

Figure 7-20

A. CONTINUITY TEST (using MERC-O-TRONIC TESTER)
Remove ignition coil. Connect meter leads to coil primary and secondary leads and turn meter selector switch to "Coil Continuity." See Figure 7-19. Index reading should be between 22 and 26.

B. POWER TEST (using MERC-O-TRONIC TESTER)
Connect meter leads to adapter, adapter red lead to coil ground lead, adapter black lead to coil primary. See Figure 7-20. Connect coil high tension lead to meter output lead. Turn meter selector to "Coil Power Test" and apply power to coil. Secondary voltage should produce a steady spark at meter spark gap at 1.4 amps (black figures on number 1 scale). Check insulation by probing the coil and entire secondary lead with the grounded test probe, meter output lead should be disconnected. See Figure 7-21. Arcing will be apparent wherever the insulation has broken down, due to moisture or carbon trails.

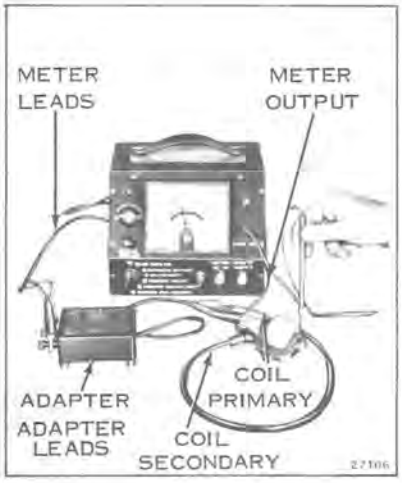

Figure 7-21

C. INSULATION TEST (using MERC-O-TRONIC TESTER)
Connect meter leads to adapter, adapter leads to coil primary and disconnect meter output to coil secondary. Probe the coil and entire secondary lead with the grounded test probe. See Figure 7-21. Arcing will be apparent wherever the insulation has broken down, due to moisture or carbon trails.

NOTE

1. Do not permit test probe to linger too long at any point while conducting this test.

2. Complete test as rapidly as possible, as this is a severe test on a coil.

ALTERNATOR

TROUBLE SHOOTING

Failure in the alternator charging circuit will usually show up when the battery fails to retain a charge sufficient to start the engine consistently. To determine the cause of trouble, check the condition of the battery and electrical connections throughout the circuit, before proceeding with electrical testing. A visual inspection may be all that is required to locate the trouble.

NOTE

Disconnect battery leads before tightening or changing any connections, to avoid the possibility of shorting out the electrical system.

a. Battery. Check condition as described under Battery Testing, Battery Inspection, and Battery Care.

b. Wiring. The importance of connections which are good electrically and mechanically throughout the circuit cannot be overemphasized. The largest percentage of electrical system failures are caused by one or more loose or dirty connections. Check for corroded or loose connections, and for worn or frayed insulation. Check the battery cables for possible reverse polarity.

c. Connections. Although connections are easily made, care must be used when fastening terminals together. If connectors are not assembled properly, one or more of the terminals may back out of the housing, preventing one or more of the electrical circuits from operating. To eliminate problems due to improper connections, examine the terminals on both halves of the connectors after assembly to be sure that all terminal ends are in place.

If a visual inspection of the electrical system shows all components to be in good condition, an electrical inspection will be necessary to determine which component of the charging system is the cause of trouble.

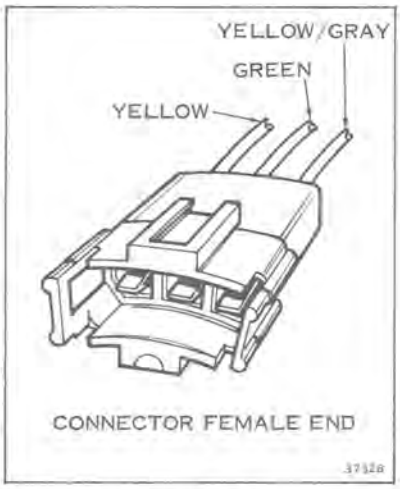

Figure 7-22

ALTERNATOR COIL RESISTANCE TESTS

NOTE

Do not take resistance test at rectifier.

A. Disconnect the stator three way twin lock connector (curved connector) behind belt guard. See Figure 7-22.

B. Set ohmmeter on low ohms or R x 1 scale and check the resistance between yellow and yellow/gray stripe leads. This reading should be .91 ohms ±10%.

C. Leave ohmmeter set as in (B) above with one lead attached to yellow/gray stripe lead and connect other meter lead to green wire. This reading should be .38 ohms ± 10%.

D. Set the ohmmeter to high ohms position and check between each of the above wires and ground for shorts to ground. Replace the wires to the correct positions.

IGNITION KEY SWITCH CHECK

A. Pull quick disconnect from back of key switch.
B. Connect ohmmeter or continuity light to A & Y terminal.
C. Put ignition switch in Lights/Run position - full continuity.
D. Key switch in any other position - no continuity.

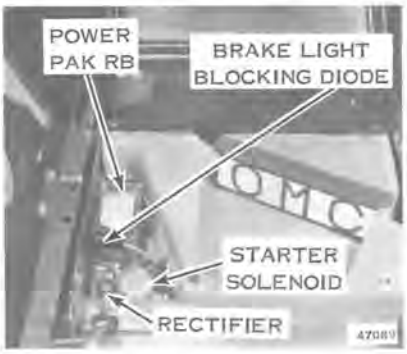

Figure 7-23

ALTERNATOR COIL OUTPUT TEST

A. Remove yellow lead from positive terminal of rectifier.

B. Connect one D.C. amp meter lead to positive terminal of rectifier.

C. Connect other amp meter lead to yellow lead removed in step (A). Run engine to 4500 RPM with key switch in "Run" position. Amp meter should read 4 amps. Turn ignition switch to lights position, amp meter should read 11 amps at 4500 RPM. If amp meter hand deflects to left in above test reverse amp meter leads.

STOP SWITCH TEST

Pull connector apart and connect continuity meter across two stop switch leads.

1. Depress Button - "Off position" - full continuity

2. Depress Button - "Run position" - no continuity

DIMMER SWITCH TEST

1. Depress Button - "high beam" - full continuity
2. Depress Button - "low beam" - no continuity

BLOCKING DIODE TEST (See Figure 7-23)

A. Remove diode leads and connect continuity meter (HI ohms scale) between gray and yellow lead. Reverse leads and note reading. Meter should read in one direction only.

B. Repeat blocking diode test on gray and blue lead. Meter should read in one direction only.

C. Repeat blocking diode test on yellow and blue lead. Meter should read in both directions.

BRAKELAMP SWITCH TEST

A. Pull connectors apart (near brake switch).

B. Connect continuity meter to each of the terminals.

C. Pull up on switch plunger - full continuity.

D. Release plunger - no continuity.

NOTE

If brake is not properly adjusted, brake switch will not function properly.

CHECKING RECTIFIER DIODES

Use an ohmmeter (HI ohms scale) to check for shorted or open diodes. This is basically a continuity test.

Disconnect all leads from rectifier assembly. Check a diode by connecting test leads to adjacent terminals on rectifier assembly and note the reading. Reverse the test leads and again note the reading. A good diode will give a reading in one direction only.

Repeat the test procedure for the other diodes by connecting the test leads between adjacent terminals.

Connect leads to correct terminals. See Figure 7-23A.

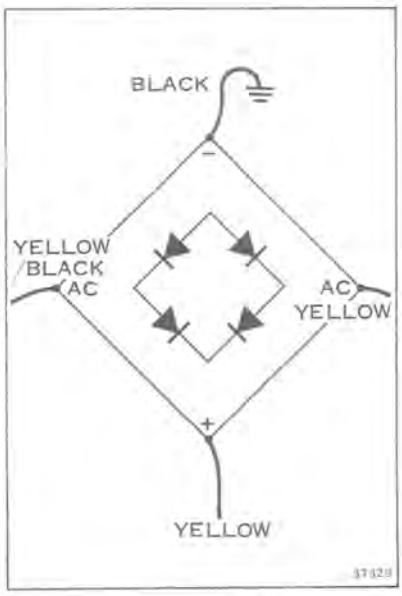

Figure 7-23A

IGNITION SYSTEM REPAIR

DISASSEMBLY

1. Remove primary drive. See Section 10.

2. Cut the electrical wiring tie straps and remove the electrical wire clips securing the electrical wiring to the flywheel side housing.

3. Remove three screws and lockwashers securing the alternator and charge coil assembly. Remove screw holding wiring harness. See Figure 7-24.

4. Remove the ignition sensor and shield assembly held with four screws and two clamp screws. See Figure 7-25.

Figure 7-24

Figure 7-25

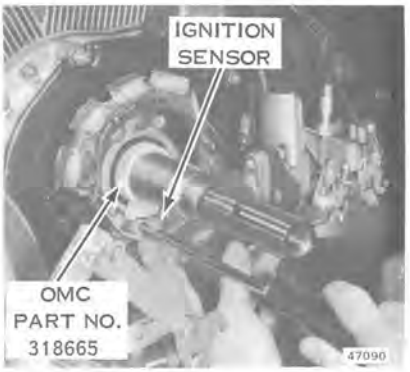

Figure 7-26

REASSEMBLY

1. Install the ignition sensor coil and shield assembly to the flywheel end side housing.

NOTE

The tolerances in the bearings make it necessary to push down on the crankshaft when setting the ignition sensor.

2. Position the sensor using the sensor gauge assembly and snug the sensor screws to 10-12 in. lbs. See Figure 7-26. Use Loctite Retaining Compound TL242.

3. Install the stator and coil assembly to the flywheel end housing.

4. Secure the stator and coil assembly wires and the sensor wires with the proper wiring clamps and ties.

5. Replace flywheel and primary drive. See Section 10. Clean flywheel of dirt or metal filings which may have accumulated on magnets before installing. See Figure 7-27.

Figure 7-27

IGNITION TIMING

Ignition timing is fixed. It can be checked, using a timing light aimed at the flywheel advance mark and minor axis thru bolt. See Figure 7-28. If they are not in alignment, there are several possible reasons:

1. Sensor leads wired to wrong terminals on Power Pack RB.
2. Sheared key or missing key on flywheel.

Figure 7-28

SPARK PLUGS

The only spark plug approved for use in your engine is the Champion UP-77V. See Figure 7-29. To remove spark plug for inspection, pull off rubber covered spark plug terminal with a slight counterclockwise twist. Remove spark plug.

NOTE

Care should be taken to avoid over torqueing the spark plug when the engine is hot. A spark plug installed in a hot engine at the torque figure below may be very difficult to remove when cold, and could result in damage to the rotor housing threads.

Figure 7-29

If center electrode is badly worn, or plug is badly carboned it must be replaced. Recommended torque is (12-15 ft. lbs. Cold). DO NOT EXCEED 15 FT. LBS. If 15 ft. lbs. is exceeded, severe engine damage could occur which may require replacement of rotor housing. Spring inside rubber covered spark plug terminal must fit securely over spark plug terminal.

DO NOT clean plugs on abrasive blasting machines. This type of cleaning tends to remove the hard, smooth finish from the insulator tip and reduces the tip's resistance to the formation of combustion deposits.

Poor engine performance and premature spark plug failure may result from improper spark plug installation. Before installing the plug, be sure the plug seat in the cylinder head is cleaned and free from obstructions. Clean and inspect spark plug hole threads.

Improper installation is one of the greatest single causes of unsatisfactory spark plug performance. Improper installation is the result of one or more of the following:

1. Installation of plugs with insufficient torque to correctly compress the gasket.
2. Installation of plugs using excessive torque can strip the threads in the rotor housing.
3. Installation of plugs on dirty gasket seal.
4. Installation of plugs in corroded spark plug hole threads.

BATTERY

NOTE

Electric start model snowmobiles should not be started and operated with battery not connected in circuit. Operation without battery can damage rectifier and tachometer. If snowmobile must be operated without battery, disconnect the stator three way twin lock connector (curved connector) behind belt guard, (see Figure 7-23) and turn ignition switch to "Run."

DESCRIPTION

The battery's primary function is to provide power to operate the starting motor; however, the battery also supplies power to operate the lights when the engine is not running at higher speeds. The storage battery is a secondary chemical generator - one that produces an

electric current by chemical action after having been charged from an outside source. Each cell in the storage battery consists of a negative plate of sponge lead and a positive plate of lead peroxide immersed in a solution of water and sulphuric acid. After being charged, each cell will produce a voltage of about 2.1 volts. Six cells, connected in series, are assembled in a case to make up a 12-volt battery.

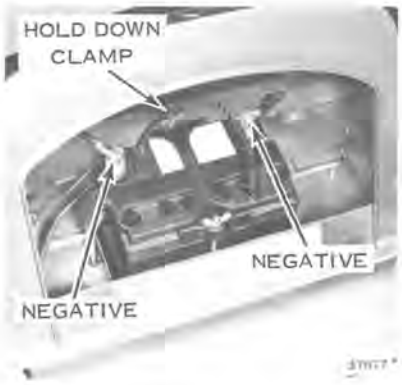

Figure 7-30

SPECIFICATIONS

Due to the extreme weather and temperature conditions under which the battery must operate, proper battery selection is very important. The battery recommended for best performance is a 12-volt, 32 ampere hour battery, or better, with a minimum of 2.2 minutes cold starting capacity at 150 amperes discharge, 0° Fahrenheit, and a 5-second voltage reading of 7.8 volts. It is important to remember that a customer's complaint of poor starting may be traceable to a battery not having these recommended specifications. The dimensions are 7-3/4" long x 5-1/8" wide x 7-1/4" high (to top of terminals).

The Prestolite brand battery, which is included with this vehicle, is recommended and is manufactured for snow vehicle use. Anchored elements reduce the possibility of vibration damage. This battery is manifold vented. It does not have vented cell caps, and vented caps should not be used on this battery. A vent tube from the battery manifold exits through the snowmobile chassis. The dangerously explosive hydrogen gases generated when charging or jumping a battery are therefore vented a safe distance from the hazard of spark at the battery terminals. Check vent tube periodically to make sure that it is not pinched, clogged, or ruptured. The battery is shipped dry. It is activated with dry charge electrolyte available locally. Replacement battery is Prestolite (Part No. 2920 Canada) (Part No. 9955X U.S.A.)

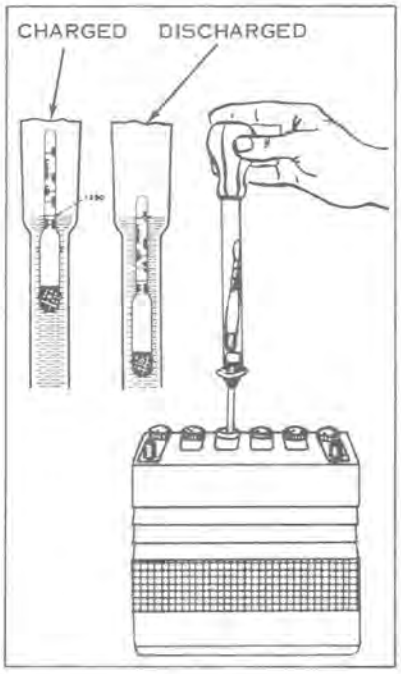

Figure 7-31

INSTALLATION

NOTE

Push manifold vent tube up until properly seated.

Filler caps must be tight and plastic tube outlet extended below battery for manifold system to function correctly.

The hold down clamp should be tight enough to hold the battery, but should not exert undue force on the case. If the clamp is too tight, distortion and damage to battery case will result. See Figure 7-30.

SAFETY WARNING

Battery Electrolyte is a strong acid solution and should be handled with care. If Electrolyte is spilled or splashed on any part of the body, IMMEDIATELY flush the exposed area with liberal amounts of water and obtain medical aid as soon as possible.

Connect battery cables, making sure clamps are tight on battery posts to insure good contact. Apply a coat of petroleum jelly to exposed areas of the battery posts and clamp connectors to retard corrosion.

NOTE

Correct battery polarity is extremely important. Battery must be connected with negative (-) post (black lead) to ground and positive (+) post (red lead) to starter solenoid. If positive (+) post is connected to ground, damage to the charging system will result.

BATTERY SERVICING

Check outside of battery for damage or signs of abuse such as broken case or broken cover. Check inside of battery by removing vent caps and inspecting for low electrolyte level. If battery shows signs of serious damage or abuse, it should be replaced. Visually inspect the battery for the following:

1. Corrosion
2. Frayed or broken cables
3. Cracked case or cell covers
4. Loose hold down clamps
5. Low or overfilled electrolyte

BATTERY CARE

Check the following at regular intervals:

1. Clean battery top and terminals by washing with a solution of ammonia or baking soda. Keep caps tight so that solution does not enter cells. After washing, flush top of battery with clean water.
2. Keep battery terminal connections tight and free from corrosion. If corroded, clean cable terminals and battery posts separately with a soda solution and a wire brush. Inspect cables for fraying or broken strands.
3. Keep electrolyte above the plates and separators at all times. Adhere to manufacturer's instructions for maintaining fluid level. Check electrolyte and add distilled water as necessary at weekly or semi-monthly intervals. Never add acid except when it is definitely known that some has been lost by spilling. If water is added in freezing weather, charge the battery to full charge at once. Charging the battery will mix the water with the electrolyte and prevent water freezing in the battery. CAUTION: Do not overfill. Spilled acid may damage surrounding parts.
4. Keep the battery nearly fully charged at all times. Check the state of charge at frequent intervals by making specific gravity readings with a battery hydrometer (see Figure 7-31). Note that a hydrometer reading is not accurate if water has been added recently, due to the fact that the water may not be mixed with the electrolyte.

Self-discharge will cause storage batteries to become discharged and sulphated if they are not properly maintained in storage. To minimize self-discharge, store batteries in as cool a place as possible, so long as the electrolyte does not freeze. A battery which has been allowed to stand idle for a long period of time may be so badly damaged by sulphation that it can never be restored to a normal charge condition. Batteries should be recharged every 30 days to prevent this damage. Disconnect one of the battery leads before charging battery. If storage temperature is hot, more frequent charging will be necessary. Add water if necessary before charging, to bring electrolyte to proper level. Fully charged batteries have been known to withstand temperatures as low as -90°F.; a discharged battery will freeze at about -19°F., perhaps causing bursting of both the cell and battery cases.

5. Check manifold vent hose to see that it is not blocked.

BATTERY TESTING

a. Make sure battery is fully charged as described under SLOW CHARGING. Hydrometer readings taken on partially charged batteries are unreliable for the following test.

b. Measure specific gravity of electrolyte in each cell and compare readings with the following; if cell readings are between 1.250 and 1.290, the battery is ready for use. Any variation in the specific gravity between cells within this range does not indicate a defective battery. Readings should be corrected to 80° Fahrenheit for comparison. If this specific gravity of any cell falls outside this range (1.250 to 1.290), replace the battery.

BATTERY CHARGING

SAFETY WARNING

Gases given off by a battery being charged or jumped are highly explosive. Keep battery in a ventilated area and away from cigarettes and open flames when charging or jumping. Turn off battery charger before removing cables from battery. Remove cables from good battery first, when jumping.

For best performance a good battery should be fully charged before being returned to service. DO NOT recharge the battery by the fast charge method. This method does not restore the full charge and also shortens the life of the battery.

SLOW CHARGING

Battery is kept charged by alternator coils located beneath flywheel. It may be necessary to use a separate 12 volt battery charger occasionally to keep battery fully charged during long storage periods, or in extreme cold weather if engine is started repeatedly. Battery should be removed from compartment for charging and initial filling. Prior to removing battery from compartment, disconnect vent tube. Pull tube straight down to remove it from the battery. Reconnect vent tube when battery is replaced in vehicle. Push tube straight up into battery until it is seated. Adjust electrolyte to proper level by adding water, then charge battery at a maximum rate of 4 amperes until fully charged. Leave caps on battery while charging. Battery is fully charged when hydrometer scale shows a corrected reading of 1.260 and does not change after three hourly readings. Cells will gas freely when fully charged.

PRESTOLITE BATTERY WARRANTY

Warranty on Prestolite batteries used in this snowmobile is covered directly by Prestolite, through their authorized battery service stations, for a period of 18 months in the United States and 9 months in Canada. Should a battery fail, due to inherent defects, during the first three (3) months of service, it will be replaced on a no-charge basis. Batteries that fail during the balance of the warranty period (15 months) in the U.S. and (6 months) in Canada will be replaced on a prorata basis.

In Canada Prestolite warranty should be handled through the dealer from whom the snowmobile was purchased or through a Prestolite battery depot.

The warranty period starts on the date the snowmobile is delivered to the original owner.

Figure 7-32

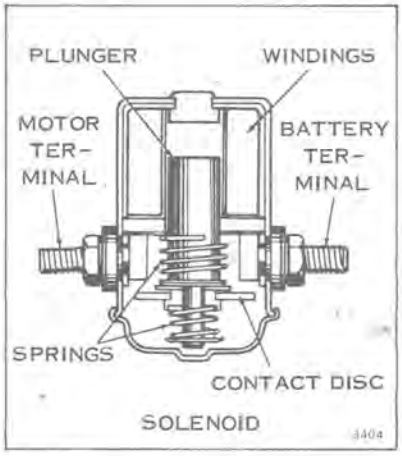

Figure 7-33

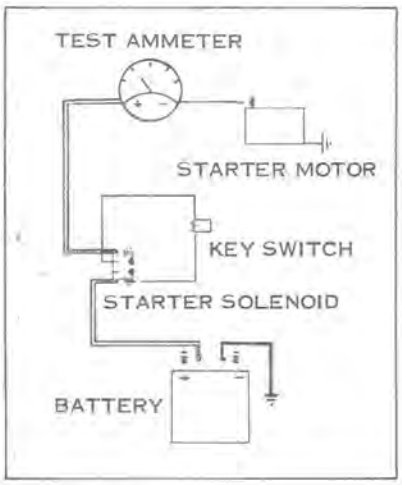

Figure 7-34

STARTER SYSTEM

DESCRIPTION (See Figure 7-32)

The electric starter system consists of the starter motor, starter solenoid, and the necessary cables and wires with their connectors. The starter motor converts electrical energy from the battery into mechanical power which is transmitted to the engine through the starter pinion gear. The starter switch controls the operation by activating the starter solenoid which makes and breaks the high current circuit between the battery and the starter motor.

The starter solenoid (see Figure 7-33) closes the circuit through a movable contact disc which strikes two terminal contacts that are connected to the starter motor circuit. The solenoid winding, when energized, exerts a magnetic pull on the solenoid plunger, causing it to move the contact disc against the terminal contacts.

MAINTENANCE

The outside of the starter motor and drive should be cleaned periodically. Every 50 hours of operation, the helix should be cleaned and lubricated with Lubriplate 777 on both sides of the drive gear. No periodic lubrication of the starter motor or solenoid is required. Starter motor need be removed for reconditioning only every 1000 hours or if the following tests indicate that the starter is not operating properly. If the starter motor does not crank the engine or if it cranks too slowly, check the battery, cables, and connections. Inspect all wiring connections in the starter circuit to insure that they are clean and tight. Proceed with the following tests if additional troubleshooting is necessary.

STARTER SYSTEM TESTING

The following tests fall into two groups, starter circuit tests and starter motor tests. Starter circuit testing is a quick means of pinpointing causes of hard starting which may result from a faulty electrical component in the starter circuit, and can be performed without removing any components from the engine. NOTE: All starter circuit testing must be done with a fully charged, 12-volt battery.

STARTER CIRCUIT TESTING

Starter Motor Amperage Draw Test

a. Ground spark plug high tension leads so that engine can be cranked without firing. Place clamp-on D.C. ammeter capable of reading at least 200 amperes around starter motor lead (see Figure 7-34).

b. Turn ignition switch to START and observe amperage reading with engine cranking. Current should be between 75 amperes minimum and 140 amperes maximum after initial surge.

NOTE

DO NOT operate starter motor for more than thirty seconds at a time without pausing to allow motor to cool for at least two minutes.

Starter Motor Available Voltage Test

a. Inspect battery and cables to make sure that battery has ample capacity for cranking. NOTE: Engine must be at normal operating temperature when test is made.

b. Ground spark plug high tension lead so that engine can be cranked without firing.

c. Connect a voltmeter across starter motor (see Figure 7-35), with positive (+) lead to starter motor terminal, and negative (-) lead to ground on starter frame.

d. Turn ignition switch to START to crank engine and observe voltmeter reading as quickly as possible.

NOTE

Avoid running starter motor continuously for more than 30 seconds during test to prevent overheating. Allow ample time between tests for starter motor temperature to normalize. Voltmeter readings will rise as starter temperature increases.

e. If starter motor turns engine at normal cranking speed with a voltage reading between 9.5 volts minimum and 10.5 volts maximum, starter motor is satisfactory. If available voltage reading at the starter motor is low, review the following chart for probable causes.

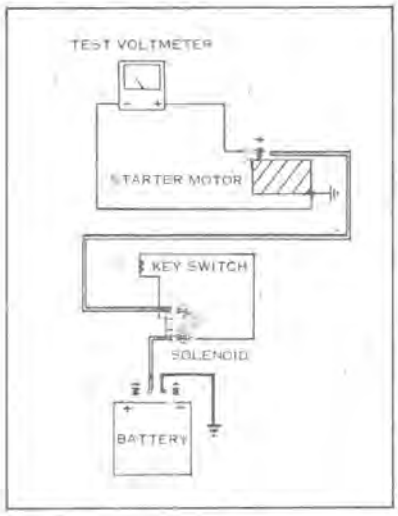

Figure 7-35

Starter System Voltage Drop Test

a. By making a systematic check from the positive battery terminal, through the starting circuit and back to the negative battery terminal, any component or electrical connection having excessive resistance, thus causing high voltage drop and subsequent hard starting, can be pinpointed (see Figure 7-36).

b. Ground spark plug high tension lead so that engine can be cranked without firing. Connect voltmeter and turn ignition switch to START to crank engine. NOTE: By placing voltmeter leads against battery, solenoid, and starter motor terminals rather than against connecting cable ends, each connection can be tested for high resistance along with component.

c. Clean and retighten, or replace, any connection, cable, or component having greater than specified voltage drop.

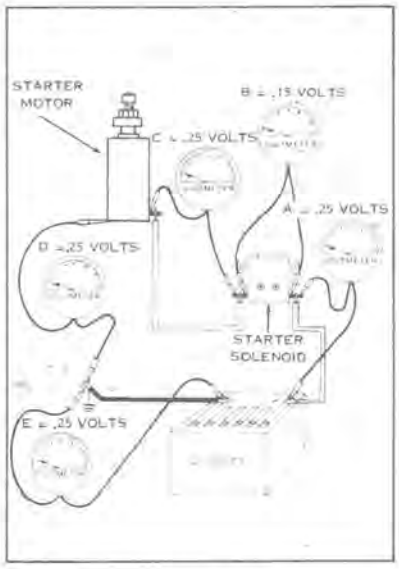

Figure 7-36

STARTER MOTOR TESTING

The no-load test is used to determine quickly the general mechanical and electrical condition of the starter motor. The stalled torque test is used to determine whether or not the starter motor has sufficient torque to crank the engine for fast starting.

No-Load Test

a. Connect starter, with an ammeter in series, to a 12-volt source (see Figure 7-37). Use a tachometer or rpm indicator to indicate armature speed.

b. Ammeter should indicate 32 amperes maximum; rpm indicator should indicate 5,750 to 8,000 RPM. If readings are not as specified, check for binding in starter or failure of windings. NOTE: If starter motor turns slowly, smokes after a very few seconds of running, or gets hot instantly, stop testing. Disassemble starter and check for shorts.

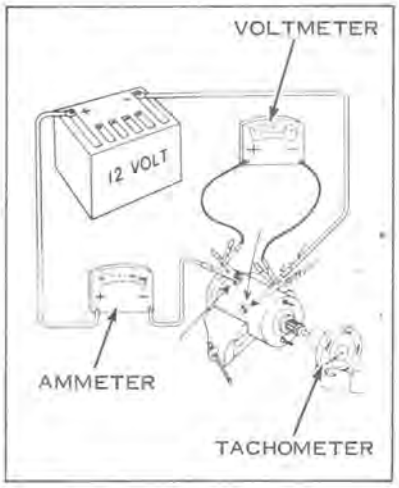

Figure 7-37

Stalled Torque Test

a. Connect a voltmeter between the starter terminal (+) and motor frame (-). Using a torque wrench to stall motor armature (see Figure 7-38), connect starter motor through an ammeter to a 12-volt battery.

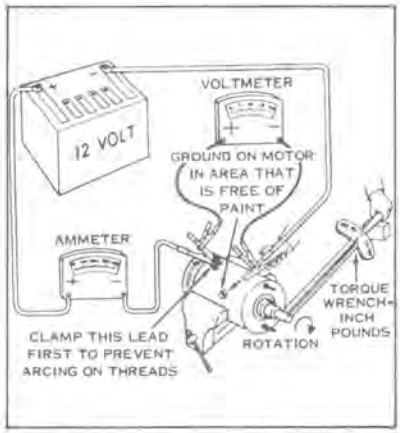

Figure 7-38

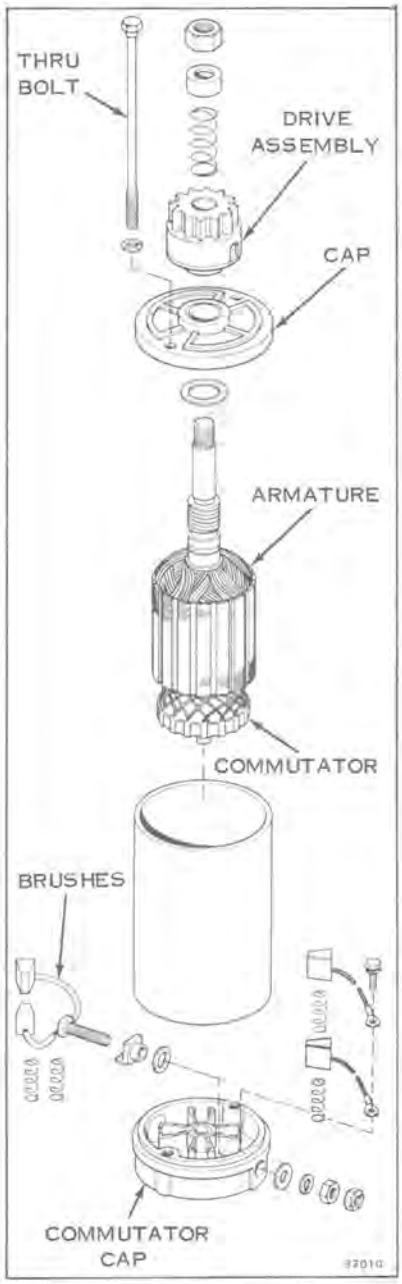

Figure 7-39

b. Voltmeter reading should be approximately 10 volts during this test. Torque should be a minimum of 4.0 ft. lbs. and current should be a maximum of 512 amperes.

NOTE

If motor smokes or gets hot instantly, stop testing, disassemble starter and check for shorts. Use only a fully charged 12-volt battery when making stalled torque test. Obtain readings as rapidly as possible to prevent starter overheating. Allow sufficient time for starter to return to room temperature if it is necessary to repeat stalled torque test.

c. Check each armature coil for open circuits by rotating torque wrench handle through a 180 degree arc after initial torque reading has been noted. This must be done quickly. Torque should be uniform through this arc, although reading will decrease slightly each time brush moves from one commutator segment to another. If an appreciably wide area is found in which torque is very low, disassemble starter and check armature.

INSPECTION OF STARTER MOTOR (See Figure 7-39)

a. Check armature on a growler for shorted turns. NOTE: Follow operating instructions furnished with armature growler for proper test procedures. Clean between commutator segments of armature and recheck armature on growler. If shorted turns are still indicated, replace armature.

b. Check armature for grounded windings. Rotate one lead of continuity tester (test light or meter) around circumference of commutator while holding other continuity meter leads on the armature core or shaft. An indication of continuity means that the armature windings are grounded and armature must be replaced.

c. Check armature for open windings by using an ohmmeter. Measure resistance between adjacent commutator segments, using LO OHMS scale. Rotate leads around entire circumference of commutator. An open winding is indicated if any one reading is much higher (three times higher or more) than the average reading.

d. Inspect commutator segments. If they are dirty or show signs of wear, turn commutator in a lathe until surface is clean and smooth.

e. After turning commutator, undercut insulation between commutator segments to a depth of approximately 1/32 inch. The undercut must be flat at the bottom and should extend beyond the brush contact area for the full length of each insulated groove (see Figure 7-40).

f. After commutator has been undercut, sand lightly with No. 00 sandpaper to remove burrs left during the undercutting process. After sanding, clean commutator thoroughly, removing all traces of metal chips or sanding grit, and recheck armature on growler.

g. Inspect armature insulation for indications of overheating or damaged windings. Clean off any deposits of carbon which may contribute to later failure of the windings. NOTE: Starter motor components should not be washed off in cleaning solvents. Most solvents will soften varnish insulation used on armature and field windings. All starter motor components can be cleaned adequately with a clean cloth or soft brush. Cleaning end heads in solvent may dissolve the oils that have impregnated into the armature shaft bearings. If these oils are removed, bearing or armature shaft wear can be expected. Cleaning of armature in solvent will leave oily residue on the commutator segments, causing arcing between the commutator and brushes.

Brushes

a. Inspect the brushes; replace if worn to one-third their original 3/8" length, or if damaged or cracked. Replace brush springs if weak.

b. Inspect brush springs. Springs should have a pressure of 35 to 90 ounces when compressed to 9/32 inch. Measure brush tension with scale hook under brush screw or under bend in brush spring, and take reading as brush just leaves commutator. Pull off spring scale must be directly opposite line of force exerted by brush spring.

Figure 7-40

ALTERNATOR

TROUBLE SHOOTING

Failure in the alternator charging circuit will usually show up when the battery fails to retain a charge sufficient to start the engine consistently. To determine the cause of trouble, check the condition of the battery and electrical connections throughout the circuit, before proceeding with electrical testing. A visual inspection may be all that is required to locate the trouble.

NOTE

Disconnect battery leads before tightening or changing any connections, to avoid the possibility of shorting out the electrical system.

a. Battery. Check condition as described under Battery Testing, Battery Inspection, and Battery Care.

b. Wiring. The importance of connections which are good electrically and mechanically throughout the circuit cannot be overemphasized. The largest percentage of electrical system failures are caused by one or more loose or dirty connections. Check for corroded or loose connections, and for worn or frayed insulation. Check the battery cables for possible reverse polarity.

c. Connections. Although connections are easily made, care must be used when fastening terminals together. If connectors are not assembled properly, one or more of the terminals may back out of the housing, preventing one or more of the electrical circuits from operating. To eliminate problems due to improper connections, examine the terminals on both halves of the connectors after assembly to be sure that all terminal ends are in place.

If a visual inspection of the electrical system shows all components to be in good condition, an electrical inspection will be necessary to determine which component of the charging system is the cause of trouble.

ALTERNATOR COILS

The alternator coils are replaceable along with the charge coils as an assembly. See Figure 7-41. The alternator coils can be checked for their correct resistance without removal of the flywheel as shown in Test #12.

ALTERNATOR AND CHARGE COIL REPLACEMENT

a. Follow steps 1 and 2 of "IGNITION SYSTEM REPAIR - DISASSEMBLY."

b. Disconnect alternator and charge coil leads.

c. Remove alternator and charge coil assembly.

Figure 7-41

d. Install and connect new alternator and charge coil assembly. Make certain that coil laminations are flush with bosses on fan housing.

e. Reassemble as described in "IGNITION SYSTEM REPAIR - RE-ASSEMBLY."

Figure 7-42

HEADLAMP ADJUSTMENT (See Figures 7-42 and 7-43)

Headlamp is adjustable for elevation of beam and right or left throw of beam.

For elevation, turn both adjustment screws in or out equally. With high beam on, adjust elevation of beam so that center of high intensity zone is 2 inches below center of lamp at a distance of 25 ft. from headlamp.

For right or left throw of beam, adjust either screw until proper aim is obtained.

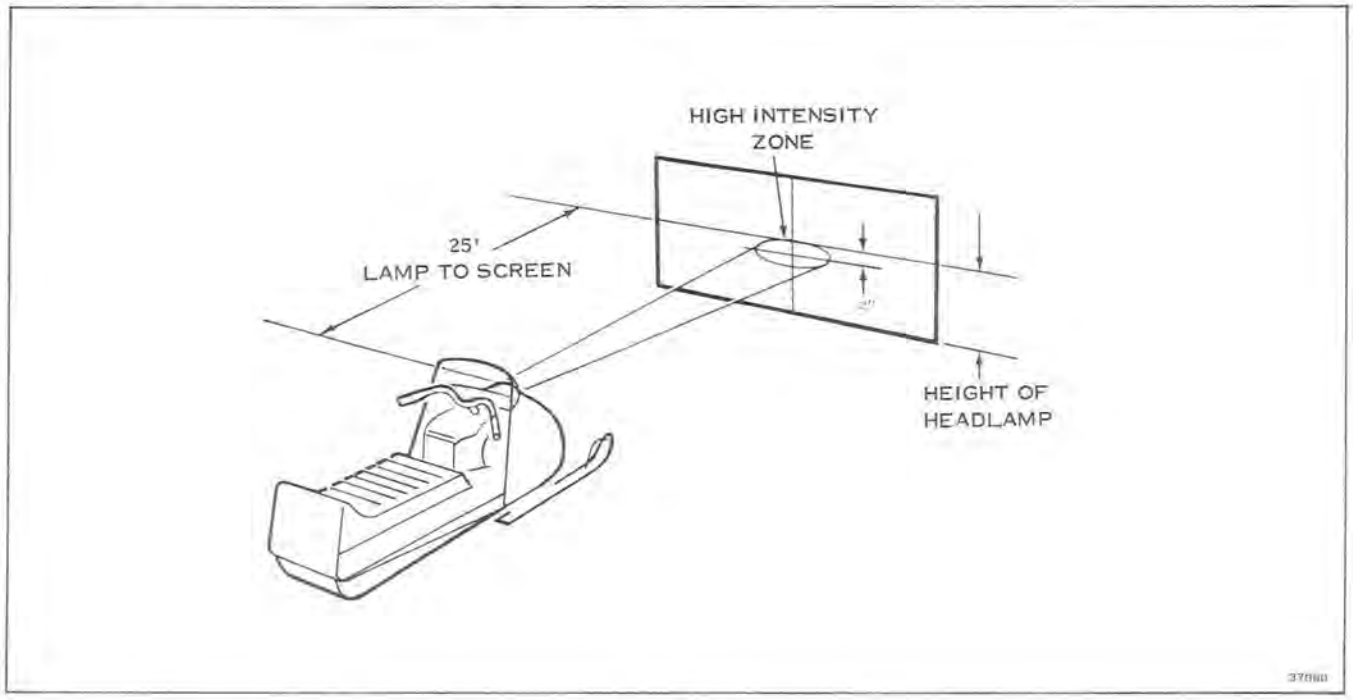

Figure 7-43

PEAK VOLTAGE TEST (USING MERC-O-TRONIC KILOVOLT METER MODEL 172)

1. Remove spark plug.

2. Connect high voltage probe to spark plug high tension lead and meter ground lead to a good engine ground. Set switch to -60 scale.

3. Pull starter vigorously with ignition and safety stop switches in "RUN" position. Observe meter reading.

4. Reading should be 18 kilovolts (minimum) (using manual starter).

5. If the reading on the kilovolt meter is 18 Kv or above the ignition system is functioning properly.

6. If the reading is lower than 18 Kv troubleshoot the ignition system components.

SECTION 8
MANUAL STARTER

TABLE OF CONTENTS

DESCRIPTION 8-2
REMOVAL AND DISASSEMBLY 8-2
CLEANING, INSPECTION, AND REPAIR 8-3
REASSEMBLY 8-3
STARTER ROPE REPLACEMENT 8-4

DESCRIPTION

The manual starter converts straight line motion to rotary motion necessary to crank the engine. Pawls on the starter pulley engage the ratchet when the starter rope handle is pulled. When the engine starts, centrifugal force moves the pawls outward, disengaging them from the ratchet. A recoil spring is wound as the rope is pulled and unwinds as the starter handle is returned to the starter housing.

NOTE

Never release handle at end of stroke, allowing rope to snap back. Serious damage will result.

REMOVAL AND DISASSEMBLY

a. Raise hood.

b. Remove three screws securing starter assembly to outer fan housing.

SAFETY WARNING

Because of the rewind spring, it is good practice to wear safety glasses when disassembling and reassembling the manual starter.

c. Remove screw (pulley to housing) and remove all components of starter pulley spindle assembly. See Figure 8-1.

d. Jar the housing, pulley side down, on bench to dislodge spring and pulley from housing.

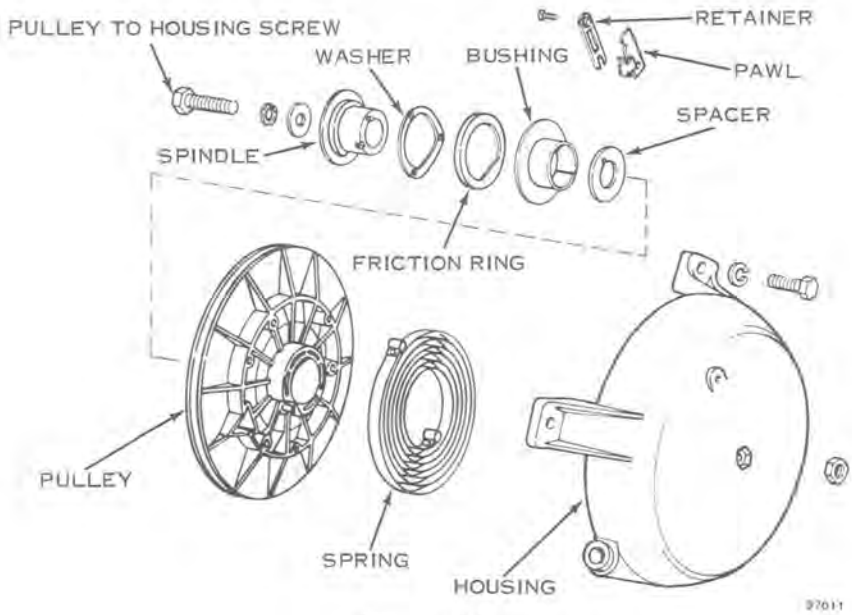

Figure 8-1

CLEANING, INSPECTION, AND REPAIR

a. Wash metal components in solvent and blow dry with compressed air.

b. Inspect spring for broken end loops or insufficient tension.

c. Examine starter pawls and ratchet for excessive wear.

d. Inspect friction ring and spring, spindle bushing, spindle, and retainers.

e. Inspect rope and discard if frayed. See STARTER ROPE REPLACEMENT.

f. Examine starter housing for sharp edges and rough surfaces that might cause rope fraying. File and polish as necessary.

REASSEMBLY

a. Rewind starter spring using fixture base No. 383966.

b. Place inside spring end loop over pulley anchor pin. Place outside spring end loop between pins on fixture base.

c. Insert handle shaft with bushing through pulley bore and into fixture base.

d. Use fixture crank to wind spring counterclockwise until tight. Release at least one turn, continuing to release until loop end spring lines up with hole drilled through edge of pulley. Slide one end of pin through holes in pulley and spring loop.

e. Carefully remove the hand crank and bushing. Lift pulley off base plate, holding spring in pulley.

f. Place pulley and spring into starter housing, making certain that spring loop is lined up exactly with pin in starter housing. Press pulley into starter housing, forcing out pin which held spring.

g. Apply grease OMC Part No. 114154 to spindle and spindle bushing only.

NOTE

Many lubricants, including OMC Type A, congeal in cold weather, and will make the starter inoperative.

Install spindle, spring washer, friction ring, and bushing. Fasten with screw, washers, and nut.

h. Tie a knot in one end of starter rope. If installing a new rope, see STARTER ROPE REPLACEMENT.

i. Turn starter pulley counterclockwise to make sure starter spring is fully wound. After spring is fully wound, allow it to unwind one turn so that pulley rope hole aligns with housing rope hole. Insert rope through pulley and starter housing. Seat rope knob firmly in pulley. Tie a slip knot in starter rope and allow pulley to rewind.

j. Install pawls, retainers, and screws.

Figure 8-2

k. Pull on starter rope to make certain that pawls work properly. When starter rope is pulled, pawls should pivot to engage flywheel ratchet. On releasing rope, pawls should retract to starting positions.

l. Attach manual starter assembly to fan housing with 3 screws.

STARTER ROPE REPLACEMENT

a. Remove starter assembly.

b. Pull starter handle until rope is fully unwound. Lock starter pulley in position by aligning holes in housing and pulley and inserting a nail or pin through them.

c. Untie knot and remove rope from rope handle. Remove rope from starter assembly.

d. Cut new starter rope to length of 73-3/4 inches. Fuse ends of rope over open flame for about one-half inch. Rope end must be stiff to hold in pulley. Tie knot in end of rope and thread through pulley and housing. See Figure 8-2.

e. Remove locking pin and allow starter to rewind.

f. Replace starter assembly.

g. Replace starter handle.

SECTION 9
ENGINE

TABLE OF CONTENTS

DESCRIPTION 9-2

REMOVAL 9-2

DISASSEMBLY 9-3

CLEANING, INSPECTION, AND REPAIR 9-8
- ROTOR 9-8
- ROTOR HOUSING 9-8

ASSEMBLY OF ENGINE 9-8
- FAN END SIDE HOUSING 9-9
- FLYWHEEL END SIDE HOUSING 9-9
- ECCENTRIC SHAFT 9-9

INSTALLATION 9-10

SEALS 9-10

FLYWHEEL 9-10

BREAK-IN 9-12

DESCRIPTION

This snowmobile is powered by a single rotor, air cooled rotary combustion (RC) engine. This section gives instructions for removal and overhaul of the engine. Principles of rotary combustion engine operation are discussed in Section 3. Trouble shooting procedures are given in Section 4.

Figure 9-1

REMOVAL (See Figures 9-1 and 9-2)

1. Disconnect the spark plug lead from the spark plug.
2. Remove battery cables (ground cable first for safety purposes).
3. Disconnect the shift rod. Put shift handle in the forward position, remove the clevis bolt from the front end of the shift rod, loosen the lock nut on the shift rod, and unscrew the front half of the shift rod from the handle.
4. Remove neutral control cable from its pivot arm.

SAFETY WARNING

Exercise caution with spilled fuel when engine or muffler is hot. Keep safe distance from smoking materials.

5. Remove fuel supply line from fuel tank.
6. Lift the seat and remove two screws and three acorn nuts securing the cover to the electrical compartment.
7. Dash may now be shifted back slightly.
8. Disconnect speedometer cable and wires, tachometer, ignition switch connector, and throttle and choke cables and primer hose from the carburetor. Remove starter handle ease rope thru dash and tie knot in rope. See Figure 9-4.
9. Remove dash panel from vehicle.
10. Disconnect two ground leads from top of engine.
11. Pull out two hairpins and remove belt guard.
12. Remove four screws securing exhaust pipe air duct.
13. Remove clamping screws from each end of exhaust pipe. Leave exhaust pipe in place until engine removal.
14. Remove transmission belt. See Section 10.
15. Scribe engine frame locating marks on chassis for correct reinstallation of engine.
16. Remove the four engine frame to chassis mounting bolts.
17. Shift the engine back slightly to free the exhaust pipe and donut gaskets.
18. Disconnect the 12 volt cable from the starter, the charge coil lead, ignition sensor leads, overspeed sensor leads and alternator leads.
19. Engine can now be removed from the chassis.

Figure 9-2

DISASSEMBLY

1. Remove the spark plug. See Figure 9-3.
2. Remove the pulse line from the rotor housing. See Figure 9-3.
3. Remove the fuel supply line from the carburetor. See Figure 9-3.
4. Remove 3 bolts and 2 washers and remove the recoil starter and air duct assembly. See Figure 9-4.
5. Remove three screws securing the rotor housing cover assembly. See Figure 9-5.
6. Remove the two primary drive lock plate screws and lock plate. See Figure 9-5.
7. ⚠ SAFETY WARNING. Primary sheave is spring loaded. Compress primary drive sheaves and hold with clamp OMC Part No. 263308. See Figure 9-6.
8. Remove the end cap bolt and plunger and rod assembly. Use flywheel holding tool. See Figure 9-6.
9. Remove the end cap assembly. Clamp can now be removed. Remove sliding sheave assembly, primary spring and spring cup from the eccentric shaft. See Figure 9-7.
10. Remove the two neutral lockout balls. See Figure 9-7.
11. Remove the transmission belt bearing. See Figure 9-7.

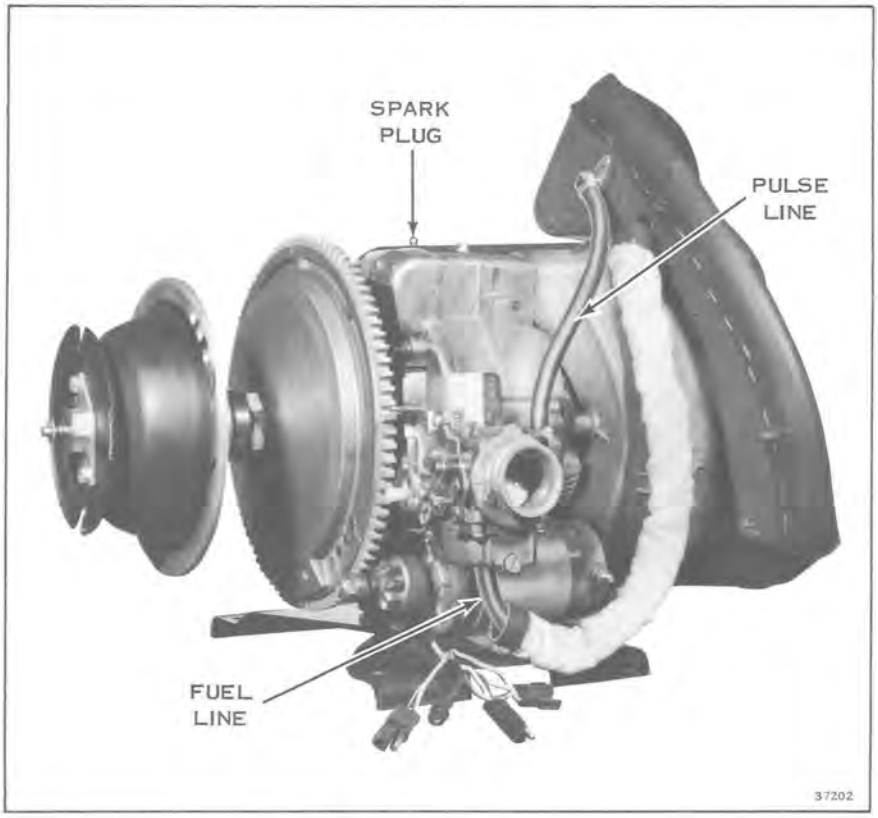

Figure 9-3

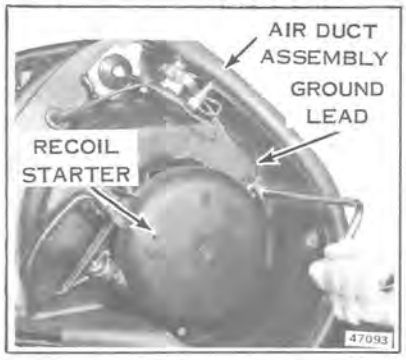

Figure 9-4

Figure 9-5

Figure 9-6

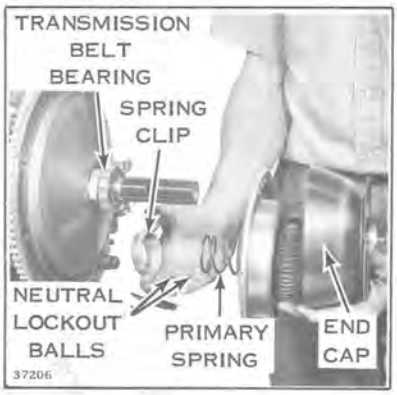

Figure 9-7

Figure 9-8

12. Remove the outer fan housing, secured with five bolts. See Figure 9-8.

13. Remove the drivetube to eccentric shaft nut. Use splined wrench OMC Part No. 114146 and 1-1/4" socket on extension. See Figure 9-9.

14. Remove the drivetube and ratchet assembly, outer fan, inner fan, and eccentric shaft counterweight. See Figure 9-10.

15. Remove the fan end woodruff key from the eccentric shaft, using screwdriver on underside of key. See Figure 9-11.

16. Remove the flywheel nut, using flywheel wrench OMC Part No. 318541 (Snap-On Part No. AN-8506-22) and splined wrench OMC Part No. 114146. See Figure 9-12.

Figure 9-9

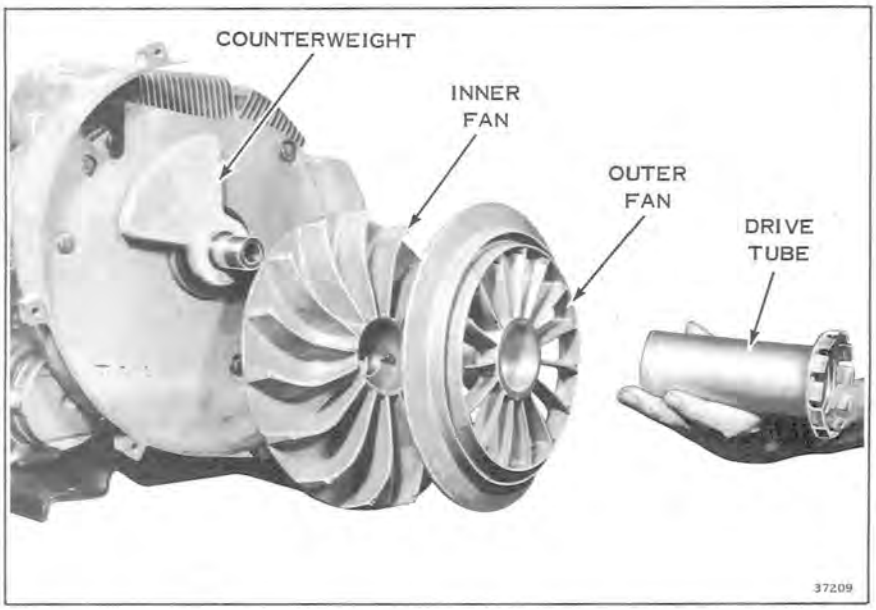

Figure 9-10

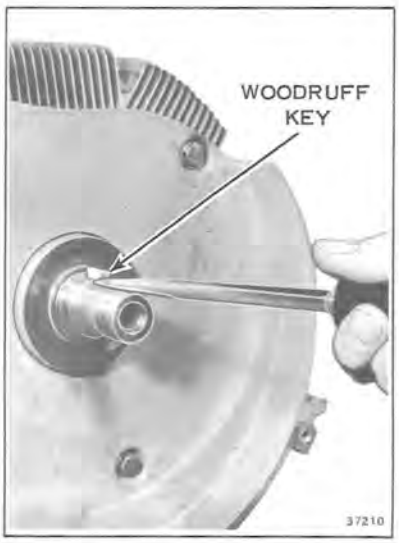

Figure 9-11

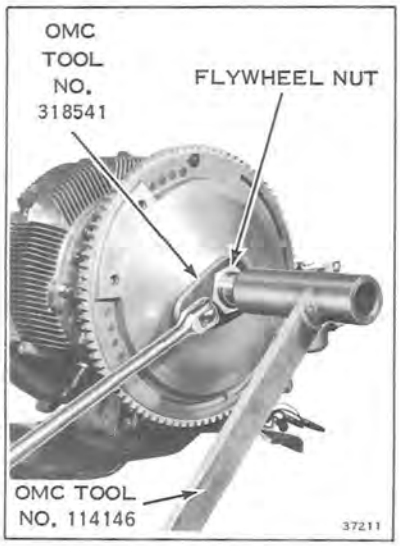

Figure 9-12

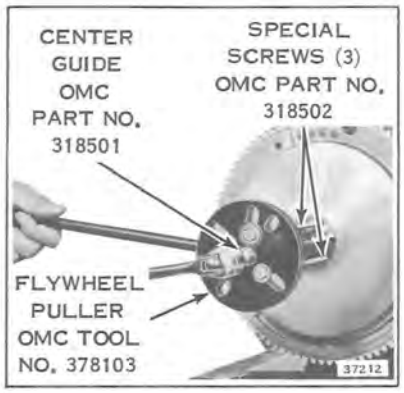

Figure 9-13

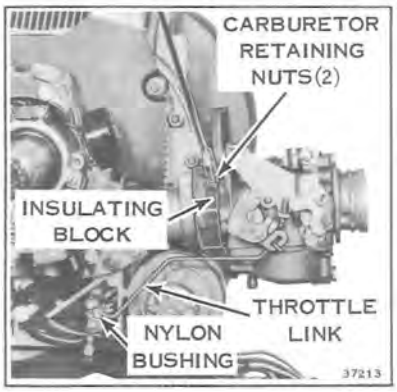

Figure 9-14

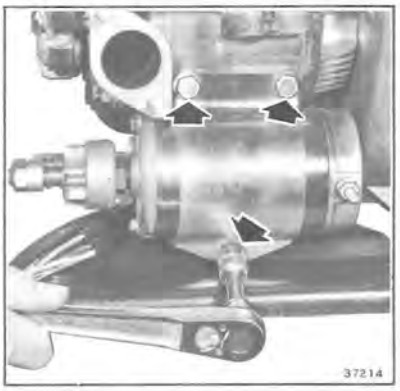

Figure 9-15

17. Using the flywheel puller, OMC Part No. 378103, center guide OMC Part No. 318501 and three screws OMC Part No. 318502 remove the flywheel. See Figure 9-13.

18. Remove four nuts and flat washers to remove the carburetor, O-ring, gasket and insulating block and disconnect the high performance throttle link by popping lower end of link out of nylon bushing. See Figure 9-14.

19. Remove the starter held with three screws and flat washers. See Figure 9-15.

20. Cut the electrical wiring tie straps and remove the electrical wire clips securing the electrical wiring to the flywheel side housing.

21. Remove three screws and lockwashers securing the alternator and charge coil assembly. Remove screw holding wiring harness. See Figure 9-16.

22. Remove the ignition sensor and shield assembly held with 5 screws. See Figure 9-17. Remove two washers under each sensor screw.

23. Turn nuts off four thru bolts and remove the inner fan housing. See Figure 9-18.

Figure 9-16

Figure 9-17

Figure 9-18

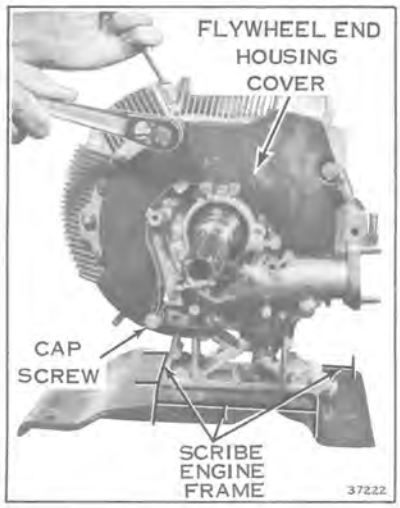

Figure 9-19

24. Remove the flywheel end housing cover held with two thru bolts and one cap screw. See Figure 9-19.
25. Remove the fan end eccentric shaft seal. Tap with sharpened scraper to pry away from side housing. See Figure 9-20.
26. Use truarc pliers to remove the external retaining ring holding the ball thrust bearing on the eccentric shaft. See Figure 9-21. Allow the shaft to drop down slightly.
27. Leave the ball type thrust bearing in the housing.
28. Loosen the eleven remaining rotor housing thru bolts. See Figure 9-22.
29. Remove all of the remaining rotor housing thru bolts except the two minor axis thru bolts. See Figure 9-22.
30. Scribe engine frame for proper engine alignment during reassembly.
31. Remove four screws and lockwashers securing the engine to the mounting frame. See Figure 9-23.
32. Position the engine housing in a suitable holding fixture (Part No. 677391). See Figure 9-24. Drill an additional 3/8" diameter hole in the position shown. With the added hole this fixture will now fit easy to the end housing flywheel side of the rotary combustion engine as shown. Mount your fixture in a vise and you now have a convenient position from which to service your unit.

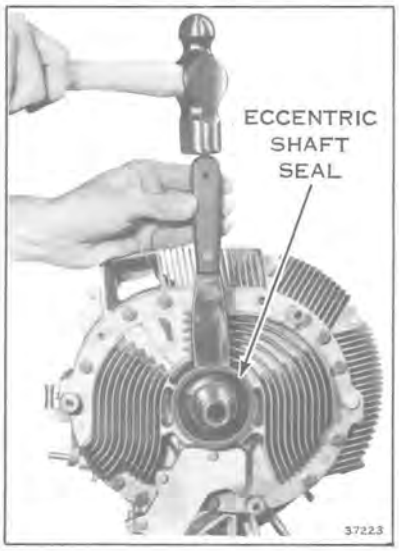

Figure 9-20

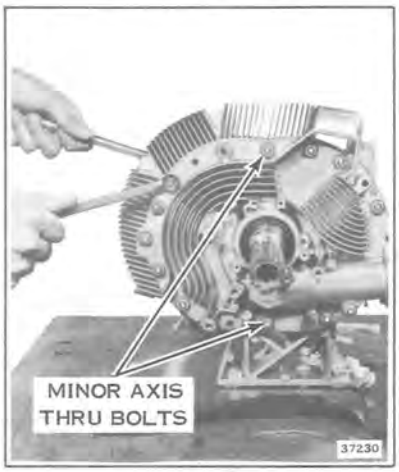

Figure 9-22

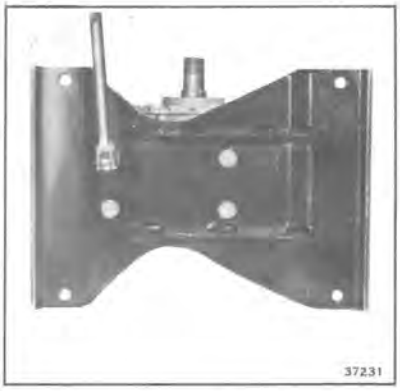

Figure 9-23

Figure 9-21

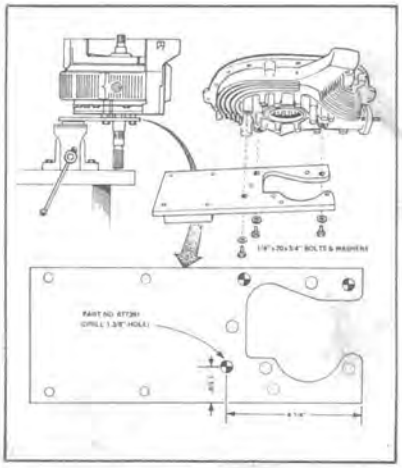

Figure 9-24

Figure 9-25

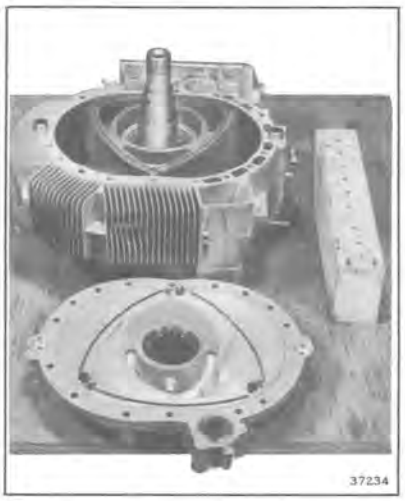

Figure 9-26

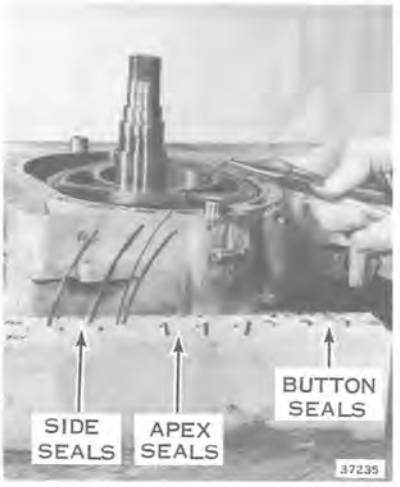

Figure 9-27

Figure 9-28

33. Remove the remaining two rotor housing thru bolts.

34. Use screwdrivers in pry tabs to loosen fan end side housing from rotor housing. See Figure 9-25.

NOTE

Care should be taken when using screwdriver so not to damage side housing on removal.

35. Lift off the fan end side housing being careful not to drop any seals and place it face side up next to the rotor housing. See Figure 9-26.

36. Place all of the side seals or button seals that came off with the fan end side housing in a seal holding fixture. See Figure 9-27.

37. Remove the remaining side seals, side seal springs, button seals, button seal springs, apex seal corners and apex seal springs from the fan end of the rotor, placing each in its appropriate location in your seal holding fixture.

38. Use screwdriver in pry tabs to loosen rotor housing from flywheel side housing. See Figure 9-28.

NOTE

Care should be taken when using screwdriver so not to damage flywheel side housing on removal.

39. Lift the rotor housing off of the flywheel end housing.

40. Remove apex seals. See Figure 9-29.

41. Lift the eccentric shaft out of the flywheel end housing. This will allow the rollers to fall out of the rotor bearing. Care should be taken to avoid loosening any of the bearing rollers.

42. Carefully lift the rotor off of the side housing and turn over on the work bench, taking note of the location of any side seals or button seals that remain on the flywheel end housing or that fall out of the rotor as it is removed.

43. Remove the remaining seal pieces and put them in the correct location in the seal holding fixture.

Figure 9-29

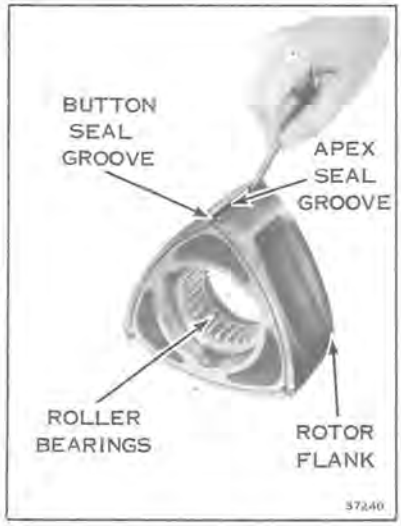

Figure 9-30

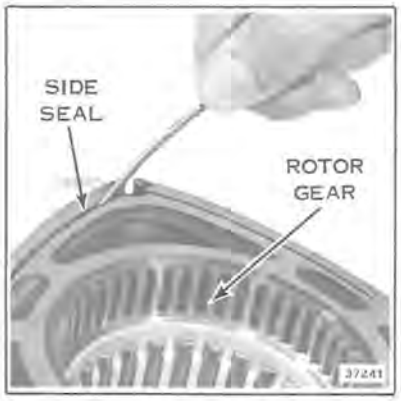

Figure 9-31

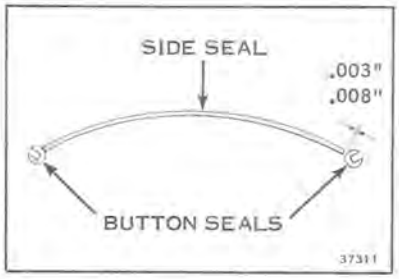

Figure 9-32

CLEANING, INSPECTION AND REPAIR

ROTOR

1. Clean the rotor apex seal grooves, side seal grooves and button seal recesses using sharpened apex and side seals as a cleaning tool to remove all carbon and deposits from the seal grooves. See Figures 9-30 and 9-31.

2. Clean the carbon from the rotor flanks using a power wire brush. Avoid all cleaning with the power wire brush in the apex seal groove area and avoid all power wire brush cleaning on the rotor sides. Any burrs which may be formed on the seal grooves by accidental cleaning with the power wire brush must be removed.

3. Inspect the rotor flank to side edges and the side seal groove edges for burrs by running a fingernail along these edges. Remove any burrs with the corner of a fine stone.

4. Inspect the apex seal groove edges for burrs. Remove any burrs with stone as above.

5. Inspect the rotor bearing rollers for galling, discoloration, or other deterioration.

6. Inspect the rotor internal gear teeth for worn, chipped, or deformed teeth.

7. Clean the apex seals and insert them one at a time in their proper locations. The seal should fit freely to the bottom of the groove from end to end of the rotor.

8. Remove all carbon from the side seals. Insert each side seal in a groove. The seal should fit in the seal groove to the full depth of the groove freely from end to end of the seal. Check each seal in its proper groove in turn. Check side seal to button end gap (.003" - .008").

9. Check each seal for correct end play. Seal should have gap of .003" - .008" on one side while flush on other side as illustrated in Figure 9-32.

ROTOR HOUSING (See Figure 9-33)

10. Inspect the rotor housing side surfaces for indications of combustion pressure leakage.

11. Inspect the edges of the trochoid surface for chips or other damage.

12. Inspect the rotor housing trochoid surface for deep scratches, hard surface flaking or chips, thermal stress cracks, or any surface deterioration around the spark plug hole, exhaust port, and intake ports.

13. Inspect the spark plug threads in the rotor housing.

14. Inspect the high performance throttle plate for tight fit in its bore when closed. Inspect the high performance throttle shaft for wear. Inspect the high performance throttle plate screws for secure fastening to the throttle shaft. Inspect the high performance throttle linkage for wear and general condition.

15. Inspect the exhaust pipe studs for general condition.

16. Check the fuel pump pulse line to see that it is open.

17. Check the cooling fins to see that they are free of obstructions.

18. Check the rotor housing side mating surfaces for burrs and carbon accumulation.

19. Check rotor housing width. Width must be 3.055" minimum at spark plug hole, and 3" to each side of spark plug hole. If less than 3.055", rotor housing must be replaced. See Figure 9-34.

FAN END SIDE HOUSING (See Figure 9-35)

20. Inspect the fan end side housing rotor sealing surface for scratches, gouges or scuffing.

21. Inspect the clamping surface for nicks, carbon, etc.

22. Inspect the bearing rollers for discoloration or other signs of deterioration.

23. Inspect the transfer passage, gasket, and passage cover.

24. Inspect the roller bearing retaining ring for proper position and condition.

25. Inspect the thrust bearing. If thrust bearing is faulty it must be replaced. Use truarc pliers to remove the internal ring holding the bearing in the side housing. On reinstallation, retaining ring must be installed with flat side against bearing.

26. Inspect the oil seal recess for a smooth surface.

FLYWHEEL END SIDE HOUSING (See Figure 9-36)

27. Inspect the flywheel end side housing rotor sealing surface for scratches, gouges, or scuffing.

28. Inspect the side housing to rotor housing clamping surface for a smooth finish and freedom from carbon.

29. Inspect the fixed timing gear teeth for wear, chipped, or deformed teeth.

30. Inspect the carburetor studs.

31. Inspect the bearing rollers for discoloration or other signs of deterioration.

32. Inspect the eccentric shaft seal.

33. Inspect the cooling fins for cleanliness and freedom of obstructions.

ECCENTRIC SHAFT (See Figure 9-37)

34. Inspect the eccentric shaft bearing surfaces for smooth finish, discoloration, and freedom from spalling.

35. Inspect the seal areas for freedom from wear.

36. Inspect the flywheel mounting taper for smooth finish.

37. Inspect the flywheel and counterweight keyways.

38. Inspect the primary drive sheave spline for wear.

39. Inspect the condition of the threads on the eccentric shaft. Remove all old LOCK-TITE from flywheel and threads.

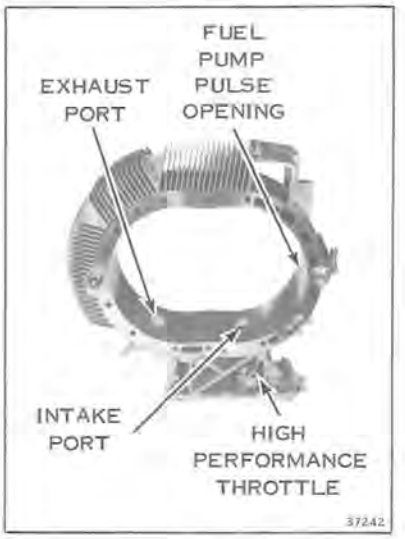

Figure 9-33

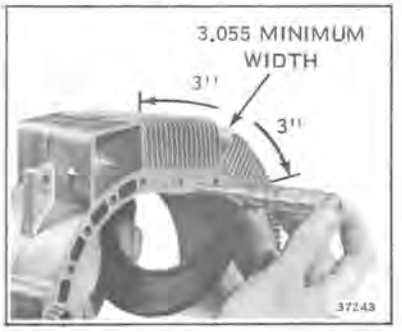

Figure 9-34

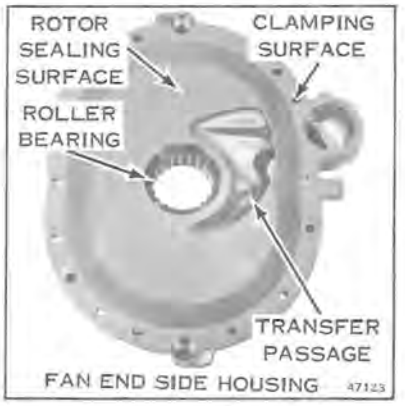

Figure 9-35

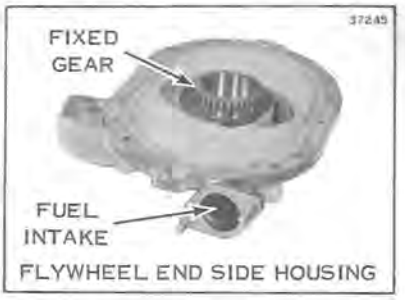

Figure 9-36

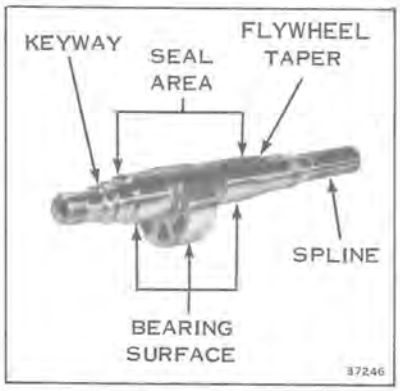

Figure 9-37

Figure 9-38

SEALS

40. Measure the height of the apex seals at two points along their length. All of the apex seals and corner seals should be replaced if the apex seal strip measures less than .315" height. See Figure 9-38.

41. Measure the side seal height with a micrometer. This is the dimension from the back of the seal to the sealing face and is measured perpendicular to the curvature of the seal. All of the side seals should be replaced if the seal height is less than .090 of an inch. The side seals should also be replaced if the sealing face has scratches or nicks that are deep enough to catch your fingernail on, or if the side seal curvature does not match the rotor side seal grooves.

42. Check the height of the apex button seals. These should be replaced if the height is less than .200 inches. Check button seals for evidence of side seal pounding. If present, side seals and buttons should be replaced.

FLYWHEEL

43. Check the flywheel bore for smoothness and freedom from fretting and check the keyway.

44. Check the flywheel ring gear.

STATOR AND SENSORS - See Section 7.

ASSEMBLY OF ENGINE (See Figure 9-39)

Begin the reassembly procedure by cleaning all parts thoroughly.

1. Lubricate the roller bearing with RC oil in the flywheel end side housing and place it on your assembly fixture.

2. Lubricate the bearing surfaces of the eccentric shaft and install the eccentric shaft in the flywheel end side housing on your assembly fixture.

3. Place the rotor, gear side up, on the work bench.

4A. Coat the side seal grooves, button seal holes and apex seal grooves on the gear side of the rotor with OMC Needle Bearing Grease Part No. 378642 to retain the seals.

B. Install all three Apex Seals, pointed end down.

C. Install all three Button Springs.

D. Install all three Buttons.

5. USED SEALS

Install the side seal springs and side seals in their grooves. Working surface of side seal must be up. Working surface of used seal will be shiny.

5. NEW REPLACEMENT SEALS

New replacement seals can be installed either side up, but they will always be oversize in length. They must be ground (with fine steel file or fine grinding wheel) to fit the rotor. With the side seal spring installed, the end clearance between one end of side seal and button seal must be .003" - .008" while other end of side seal is flush with button seal. See Figure 9-40.

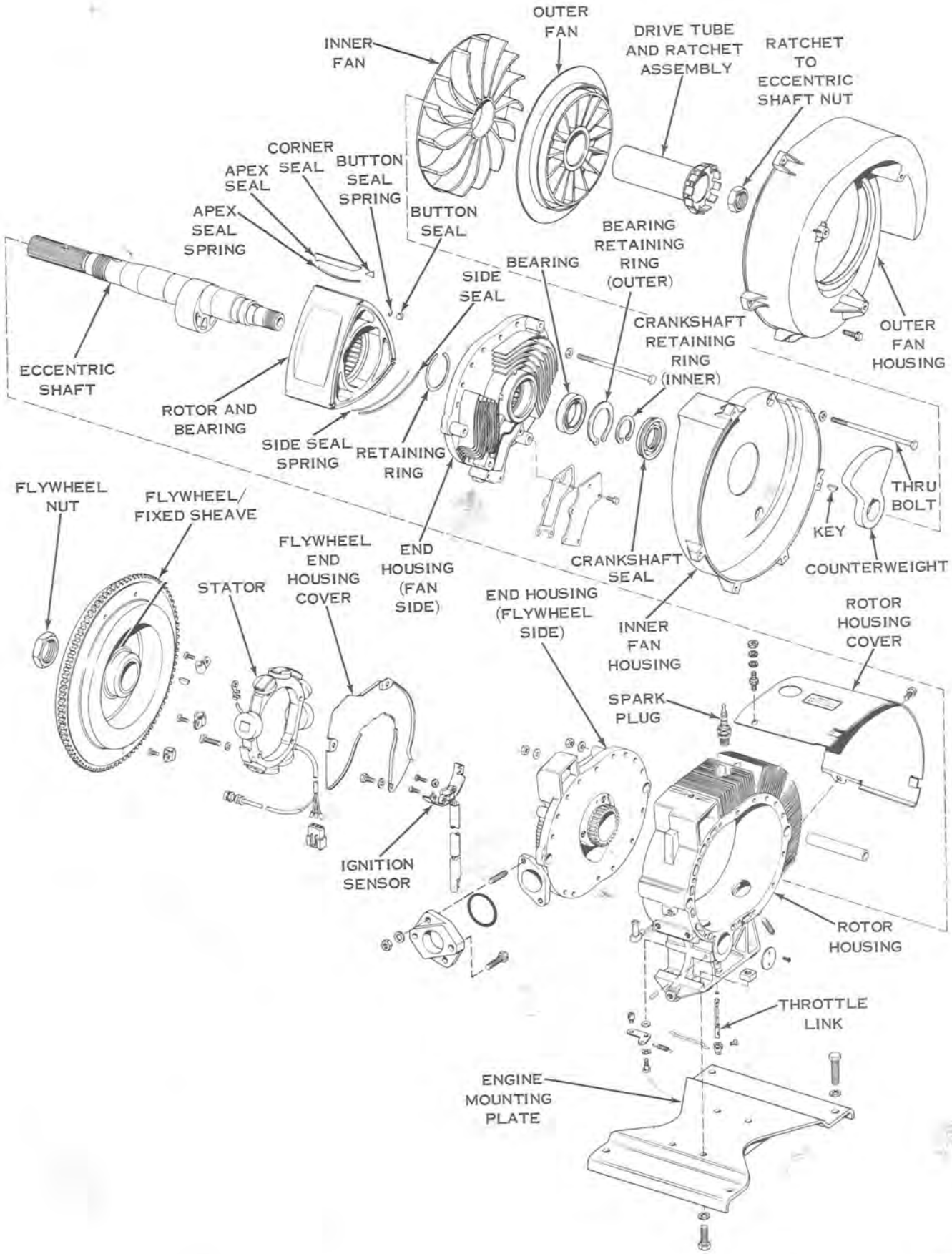
OUTER FAN
INNER FAN
DRIVE TUBE AND RATCHET ASSEMBLY
RATCHET TO ECCENTRIC SHAFT NUT
CORNER SEAL
APEX SEAL
BUTTON SEAL SPRING
APEX SEAL SPRING
BUTTON SEAL
BEARING RETAINING RING (OUTER)
BEARING
SIDE SEAL
CRANKSHAFT RETAINING RING (INNER)
OUTER FAN HOUSING
ECCENTRIC SHAFT
ROTOR AND BEARING
SIDE SEAL SPRING
RETAINING RING
THRU BOLT
FLYWHEEL NUT
FLYWHEEL/ FIXED SHEAVE
KEY
FLYWHEEL END HOUSING COVER
END HOUSING (FAN SIDE)
CRANKSHAFT SEAL
COUNTERWEIGHT
STATOR
END HOUSING (FLYWHEEL SIDE)
INNER FAN HOUSING
ROTOR HOUSING COVER
SPARK PLUG
IGNITION SENSOR
ROTOR HOUSING
THROTTLE LINK
ENGINE MOUNTING PLATE

Figure 9-39

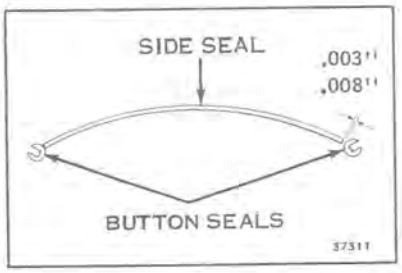

Figure 9-40

NOTE

All burrs must be removed from seals before final installation.

NOTE

Shiny surface of used seal must be up. New button seals can be installed either side up. Apply small amount of needle bearing grease to side and button seals.

6. Lightly coat inside of bearing race with OMC needle bearing grease, P/N 378642. Apply only enough to hold rollers in position prior to installation of crankshaft. Slide bearing retainer cage into race. Place all 26 needle bearings into the retainer cage slots. The grease will help hold them in position.

NOTE

Do not use any other form of grease in this application or engine damage may result.

7. Turn the eccentric shaft one revolution watching the apex points of the rotor to make sure that the rotor follows the trochoid shape and therefore the rotor and fixed gear are meshed properly. If not, raise the rotor slightly and remesh the gears to obtain proper timing.

8. Place the rotor housing on the flywheel end side housing, pressing the dowel pins in the proper holes and pushing the rotor housing down firmly.

9. Turn the eccentric shaft one revolution to be sure the rotor and fixed gear are timed properly.

10. Insert one apex seal spring behind each apex seal. See Figure 9-40A.

11. Insert the apex seal corner in the top of the groove. See Figure 9-40A.

12. Lubricate the side seal grooves and button seal holes lightly with oil. Lubricate the rotor housing trochoid surface, lightly with oil and lubricate the flywheel end side housing surface lightly with oil.

13. Insert the button seal springs and button seals in the proper holes in the rotor.

14. Insert the side seal springs and side seals in the proper grooves on the rotor. (See step 5.)

15. Check each one of the side seals, button seals and apex seals that are showing and be sure all are free and will press down with thumb pressure.

16. Lubricate the working surface of the fan end side housing and the eccentric shaft roller bearing in the fan end side housing lightly with oil and place this fan end side housing over the eccentric shaft onto the rotor and rotor housing, matching the dowel pin holes with the dowel pins in the rotor housing. Press the fan end side housing down firmly to compress the seal springs to see that everything is free.

17. Insert two thru bolts from the fan end side housing on the major axis of the engine and tighten the nuts lightly to compress the seal springs and hold the side housing securely in place.

18. Check the assembly to this point by rotating the eccentric shaft one revolution to be sure that all parts are operating freely.

19. Lift the eccentric shaft as required and install the external retaining ring on the eccentric shaft holding the thrust bearing in place.

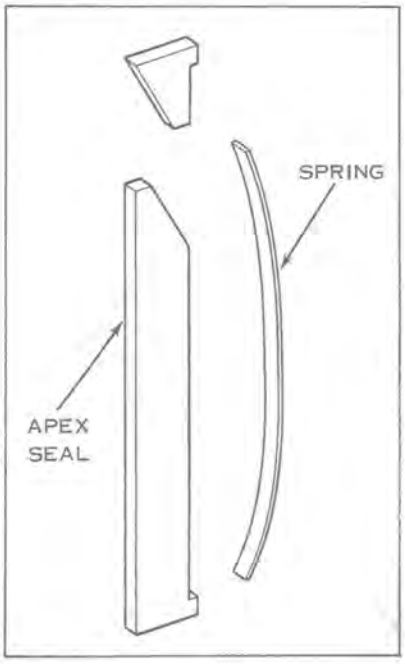

Figure 9-40A

20. Install the eccentric shaft seal in the fan end side housing.
21. Bolt the rotor housing to the engine mounting frame assembly, aligning the scribe marks to engine.
22. Install all of the short thru bolts and the one long thru bolt below the carburetor intake and snug these bolts lightly.
23. Tighten two major axis thru bolts to 50 in. lbs. to seat dowel pins in side housings.
24. Torque remainder of the rotor housing thru bolts to first 50 in. lbs. then retorque all bolts to 80 in. lbs., using the torque wrench on the nut end. Lubricate the bolt threads to insure proper torqueing.
25. Install the flywheel end housing cover and torque the thru bolts and the quarter inch capscrew to 80 in. lbs.
26. Install the inner fan housing on the fan end side housing and torque the thru bolts to 80 in. lbs.
27. Install the ignition sensor coil and shield assembly to the flywheel end side housing. Use Loctite TL242 on the screws.

NOTE

The tolerances in the bearings make it necessary to push down on the crankshaft when setting the ignition sensor.

28. Position the sensors using the sensor gauge assembly and snug the sensor screws to 10-12 in. lbs. See Figure 9-41.
29. Install the stator and coil assembly to the flywheel end housing. Use Loctite TL242 on stator mount screws.
30. Secure the stator and coil assembly wires and the sensor wires with the proper wiring clamps and ties.
31. Install the woodruff key in the fan end of the eccentric shaft.
32. Install the eccentric shaft counterweight with the marked engine side toward the engine.
33. Install the two piece fan assembly on the eccentric shaft matching the key slot with the woodruff key.
34. Install the drive tube and ratchet assembly on the eccentric shaft, matching the locating hole with the dowel in the fan.
35. Install the nut and torque to 40-45 ft. lbs. using spline wrench to hold the eccentric shaft.
36. Install the outer fan housing and secure with the screws.
37. Install the starter and starter mounting bracket.
38. Install the carburetor, gasket, heat block and O-ring. Hook up the high performance throttle linkage as the installation is made.
39. Install flywheel and primary drive. See Section 10.

NOTE

There should only be one thread exposed after nut and washer is in place.

40. Install the rotor housing cover assembly.
41. Install the air ducts assembly and the recoil starter assembly with the two spacer washers behind the air duct assembly.
42. Attach the pulse line hose to the rotor housing fitting.
43. Attach the fuel supply hose to the carburetor.
44. Hook up the charge coil wire and sensor coil wire connectors.

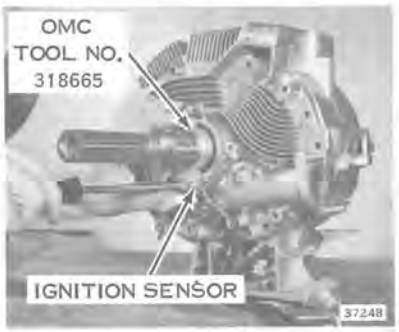

Figure 9-41

Figure 9-42

45. Loosen the screws securing the slotted high performance throttle lever. Adjust throttle lever position so that the high performance throttle link is at the edge of the throttle lever slot (as shown in Figure 9-42) with both the carburetor throttle and the high performance throttle closed. Tighten the screw. The carburetor throttle lever should turn about 15° before the slotted lever engages the high performance throttle link.

46. Set the low speed needle at 2 turns open and the idle screw to where the screw makes contact with the throttle lever plus one turn in (see Section 5).

47. Install the spark plug in the rotor housing and torque to 12-15 ft. lbs. only.

INSTALLATION

Install engine in reverse order of removal. Carefully install exhaust cone and seal assembly in exhaust port making certain that notch in cone is aligned with raised boss on inside of housing. Install exhaust pipe and flange assembly on studs in rotor housing. Tighten nuts only enough to hold exhaust cone and seal assembly in position in exhaust port. Tighten clamps.

NOTE

Care must be taken in aligning the exhaust cone in the rotor housing or damage may result in the trochoid surface when the exhaust pipe flange is tightened.

Install engine on chassis using scribe marks on chassis for proper placement. Check sheave alignment per procedure in Section 10, under SHEAVE ALIGNMENT.

Install the throttle cable to the carburetor. With throttle lever on carburetor in fully open position, adjust cable so lever on handle touches grip. When throttle lever on carburetor is returned to idle position, there should be a minimum of 1/32" overtravel of lever on handle grip.

Adjust choke so that butterfly is completely open and held by the detent when choke knob is all the way in.

Connect fuel primer and adjust clip for a 1/4" stroke before securing.

BREAK-IN

1. For the first tankful of fuel the vehicle must be operated at reduced speeds.
2. Allow engine to warm up before putting vehicle in gear. Start out slowly; avoid jack-rabbit starts. DO NOT overspeed engine. Operation in extreme cold weather can cause a slow down in the drive and track mechanism. When this occurs, block up rear of snowmobile and place front edge of skis against stationary object and run to free mechanism. DO NOT overspeed or run vehicle for prolonged periods while snowmobile is blocked up, as this can damage drive lugs on track.
3. Observe fuel mixing precautions as described in inside front cover.

IMPORTANT

Adjust drive chain tension after the first 10 hours of operation. Refer to Section 10 for drive chain adjustment instructions.

Adjust track tension after the first 10 hours of operation. Refer to Section 11 for track tension and track alignment adjustment instructions.

SECTION 10
DRIVE TRAIN

TABLE OF CONTENTS

DESCRIPTION 10-2
TRANSMISSION BELT 10-2
INSPECTION AND REPLACEMENT ... 10-2
REMOVAL 10-2
REPLACEMENT 10-2

PRIMARY DRIVE 10-3
DISASSEMBLY 10-3
DISASSEMBLY OF FLYWHEEL FROM ENGINE 10-3
CLEANING, INSPECTION AND REPAIR 10-4
REASSEMBLY OF FLYWHEEL 10-4
PRIMARY DRIVE REASSEMBLY 10-5

DRIVE CHAIN 10-5
LUBRICATION 10-5
ADJUSTMENT 10-5
CHAIN ADJUSTMENT INSTRUCTIONS .. 10-5
REMOVAL AND INSTALLATION 10-6
INSTALLATION 10-6

SHEAVE ALIGNMENT 10-6
ALIGNMENT 10-6
ADJUSTMENT PROCEDURES 10-6

BRAKE 10-7
DESCRIPTION 10-7
ADJUSTMENT 10-7
REMOVAL 10-7
REPAIR 10-7
BRAKE CABLE AND CAM ASSEMBLY 10-9

SECONDARY DRIVE 10-9
DISASSEMBLY 10-9
CLEANING, INSPECTION AND REPAIR . 10-9
REASSEMBLY 10-9

REVERSING TRANSMISSION 10-9
DESCRIPTION 10-9
LUBRICATION 10-10
REMOVAL AND DISASSEMBLY 10-10
CLEANING, INSPECTION, AND REPAIR 10-10
ASSEMBLY AND ADJUSTMENT 10-10

REVERSING TRANSMISSION LINKAGE ADJUSTMENT 10-11
DESCRIPTION 10-11
ADJUSTMENT 10-11
SHIFT CONTROL ROD ADJUSTMENT .. 10-11

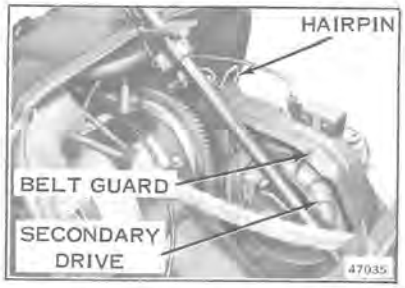

Figure 10-1

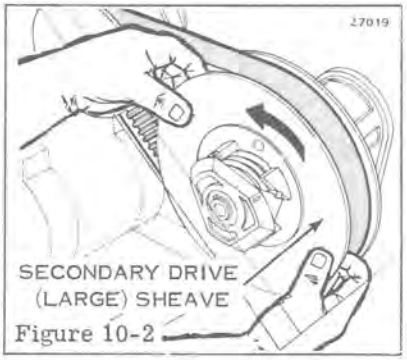

Figure 10-2

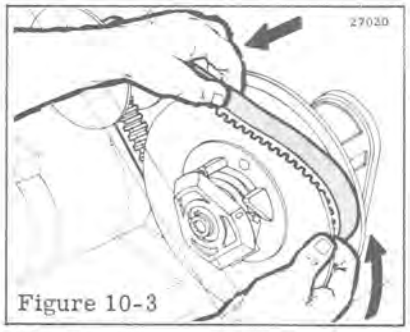

Figure 10-3

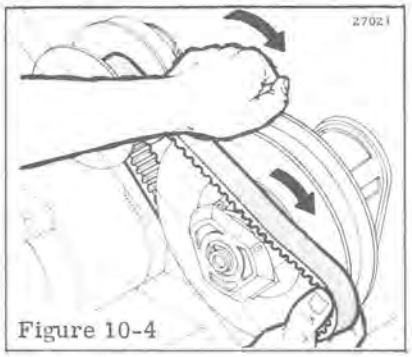

Figure 10-4

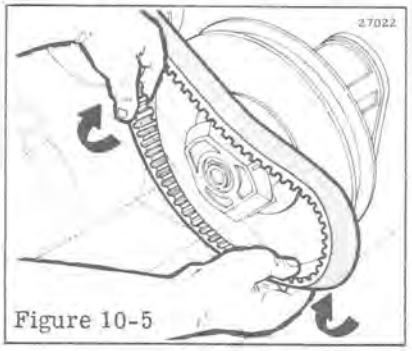

Figure 10-5

DESCRIPTION

This section gives complete service instructions on the snowmobile drive train. A brief discussion of the power flow system is included in Section 3.

TRANSMISSION BELT INSPECTION & REPLACEMENT

A belt measuring less than 1-9/16" across the width or outer surface must be replaced with a new one. Worn belt may be retained and used as a spare. A spare belt should be carried at all times.

NOTE:
DO NOT RUN ENGINE WITHOUT BELT.

REMOVAL

a. Pull out two hairpins and remove primary belt guard, Figure 10-1.

b. Pull out top hairpin and swing secondary guard forward.

c. Pull movable sheave while twisting to left, Figure 10-2.

d. Work belt over top of sheave, Figure 10-3.

SAFETY WARNING

Keep fingers from between halves of secondary sheave when performing next step. Sliding sheave is spring loaded and could pinch fingers.

e. Ride belt off sheave as sheave is twisted to right and closed, Figure 10-4.

f. Work belt out from under bottom of sheave and between steering column and end cap, Figure 10-5.

g. Move belt between end cap and exhaust manifold, Figure 10-6.

h. Disconnect neutral control cable from actuator arm and move belt between actuator arm and primary sheave. Belt is now free of snowmobile, Figure 10-7.

REPLACEMENT

a. Pass belt between actuator arm and primary sheave. Reconnect neutral lockout cable to actuator arm.

b. Loop one end of the replacement belt around the primary sheave.

c. Pull movable half of sheave toward center of machine. Hook belt on bottom of sheave and roll sheave forward. Belt will ride the sheave up and fall in place between the two halves.

d. Replace belt guards.

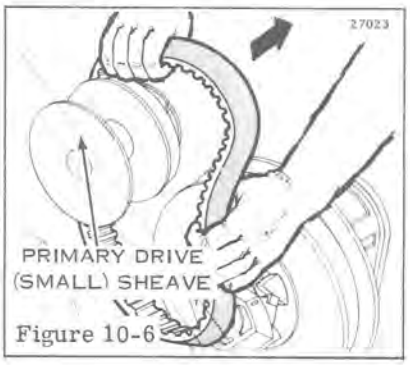

Figure 10-6

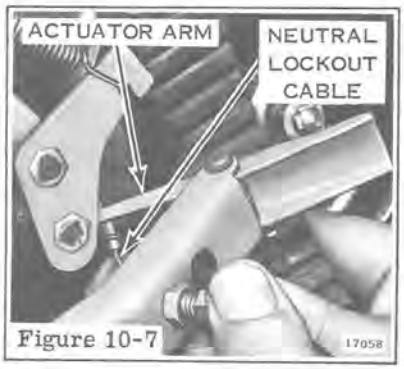

Figure 10-7

PRIMARY DRIVE

DISASSEMBLY

a. Remove two screws securing neutral control bracket to chain case. Remove bracket. See Figure 10-8.

b. Remove two screws securing lock plate to end cap assembly. See Figure 10-9.

c. Remove belt. See Page 10-2.

d. Remove springs on reverse shift. See Figure 10-8.

e. Remove clevis nut and bolt. See Figure 10-8.

f. Loosen reverse rod adjustment jam nut. See Figure 10-8.

g. Turn off reverse rod clevis. Count number of turns required so that it can be reinstalled with same number of turns, and therefore be in proper adjustment.

⚠ SAFETY WARNING

Primary sheave is spring loaded. Compress primary drive sheaves and hold with special clamp, OMC Tool No. 263308 before proceeding with disassembly.

i. Remove the end cap bolt and plunger and rod assembly. Hold flywheel with holding tool. See Figure 10-10.

j. Remove the end cap assembly.

k. Remove clamp while pressing sliding sheave toward engine.

l. Remove sliding sheave assembly, primary spring and cap, two neutral lockout balls and transmission belt bearing from eccentric shaft. See Figure 10-11.

DISASSEMBLY OF FLYWHEEL FROM ENGINE

a. Remove the flywheel nut, using flywheel wrench Snap-On Part No. AN-8506-22 or OMC Part No. 319990 and splined wrench OMC Part No. 114146. See Figure 10-12.

b. Using the flywheel puller, OMC Part No. 378103, center guide OMC Part No. 318501 and three screws OMC Part No. 318502, loosen the flywheel. See Figure 10-13.

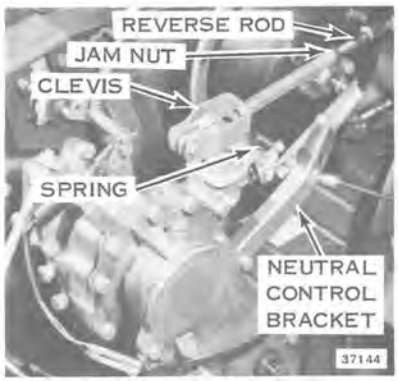

Figure 10-8

Figure 10-9

Figure 10-10

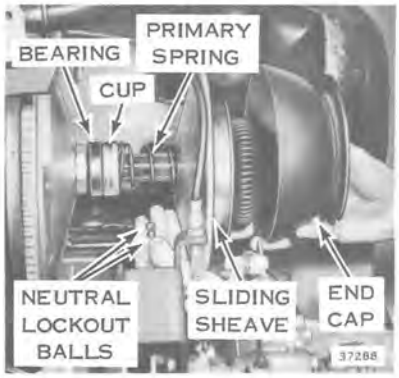

Figure 10-11

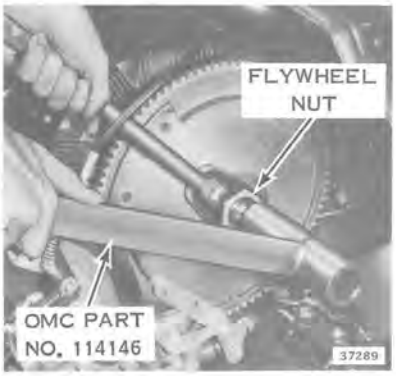

Figure 10-12

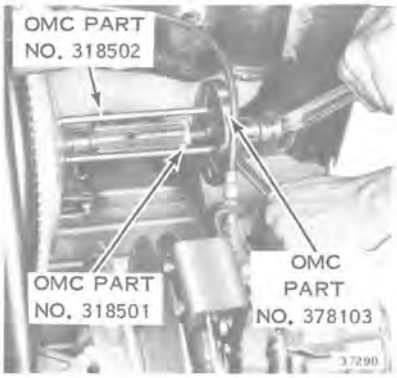

Figure 10-13

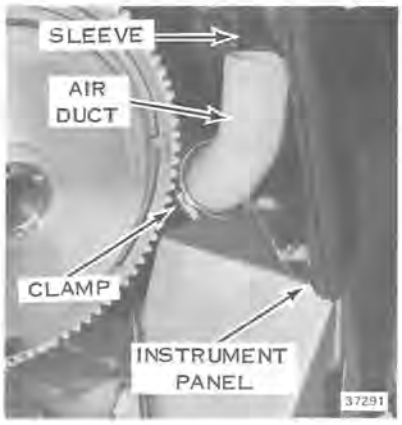

Figure 10-14

c. Remove two bolts, lockwashers and flat washers securing bottom left side of instrument panel. Loosen clamp on air intake duct. Slip rubber sleeve off air intake duct. Push the air intake duct to the rear, and flywheel can now be removed from the splined eccentric shaft. See Figure 10-14.

CLEANING, INSPECTION AND REPAIR

SAFETY WARNING

When using trichlorethylene as a cleaning agent, use in a well ventilated area at normal room temperatures, and under no circumstances heated. Trichlorethylene vapors are poisonous.

a. Clean all parts with a cleaning solvent such as Trichloroethylene and blow dry with compressed air.

b. Inspect main shaft and sheave assembly splines for wear.

c. Inspect neutral lockout plunger for wear. Replace if required.

d. Inspect transmission belt. A glazed or burned belt, or one measuring less than 1-9/16" across width or outer surface must be replaced with a new one. Worn belt should be returned to owner for use as a spare. A spare belt should be carried at all times.

REASSEMBLY OF FLYWHEEL (See Figure 10-15)

1. Clean the tapered surface of the flywheel end of the eccentric shaft and the tapered bore of the flywheel with trichlorethylene or lacquer thinner.

2. Install the flywheel on the eccentric shaft, aligning the flywheel keyway and eccentric shaft key.

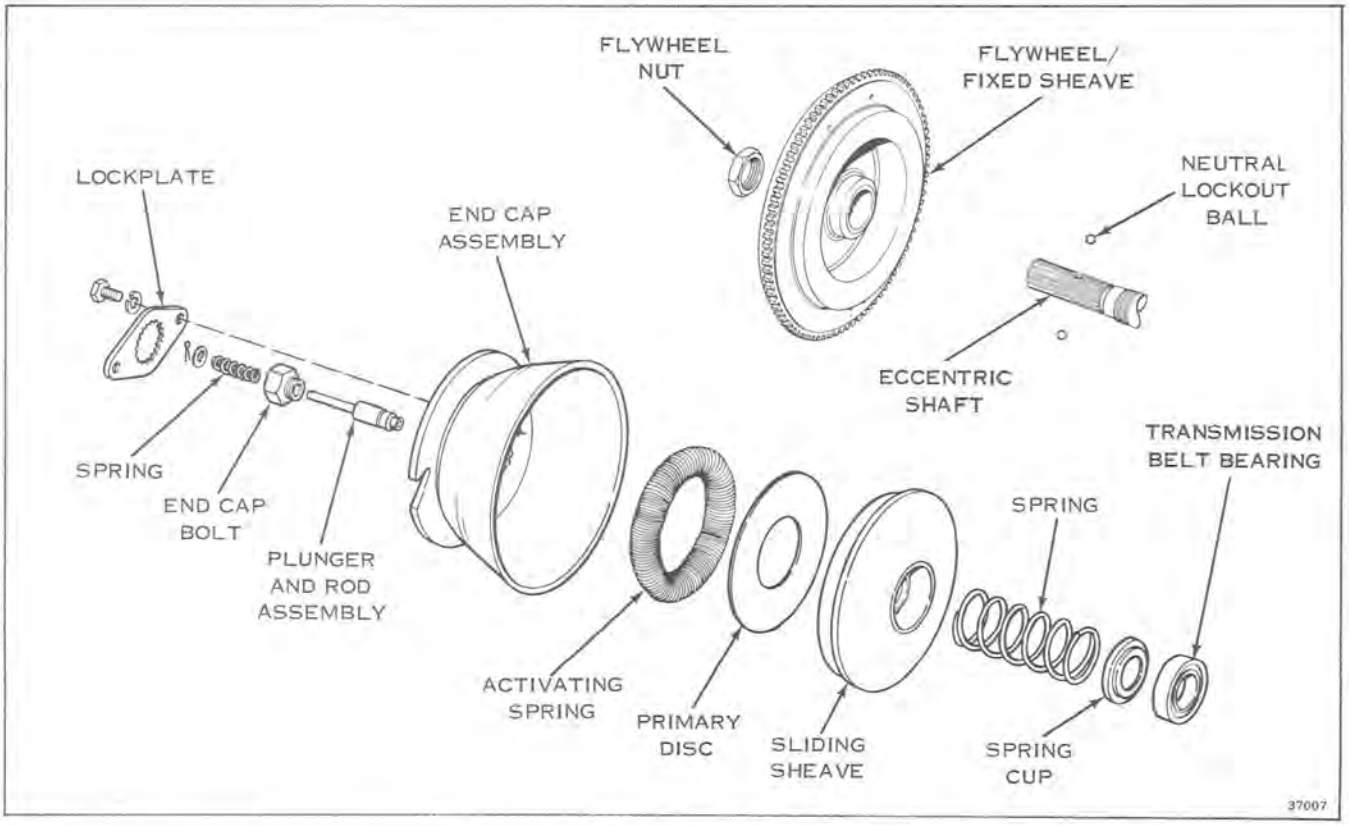

Figure 10-15

3. Hold the eccentric shaft with holding tool or spline wrench and torque flywheel nut with torque wrench and Snap-On Part No. 8506-22 as shown in Figure 10-16. Adjusted torque reading with special tool used in this manner is 75-93 ft. lbs. Use Loctite Retaining Compound #40.

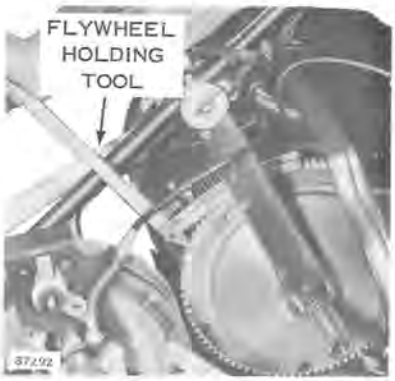

Figure 10-16

PRIMARY DRIVE REASSEMBLY

1. Install the transmission belt idler bearing on eccentric shaft.
2. Use Lubriplate 907 (OMC Part No. 114154) to lightly coat splines and retain neutral lockout balls in holes.
3. Place primary spring on shaft with closed side of spring cup toward bearing.
4. Install the two neutral lockout steel balls.
5. Install the primary spring, the sliding sheave assembly, and hold in place using the special tool, OMC Tool No. 263308.
6. Install end cap assembly on eccentric shaft spline. Insert the plunger and rod assembly and end cap bolt and thread into the eccentric shaft. Tighten the end cap bolt to 95 ± 5 ft. lbs.
7. Install the lock plate and lock plate screws. If serrations do not allow alignment of holes in lock plate and end cap, turn lock plate over and rotate until aligned position is obtained.
8. Operate the neutral lockout plunger to see that it functions properly. When neutral lockout is pushed in, the sliding sheave must not slide on spline. When neutral lockout is out (normal operating position) the sliding sheave must slide freely on spline restricted only by the primary spring.
9. Reconnect air intake duct and replace screws in instrument panel.
10. Replace transmission belt and belt guards. See Page 10-2.
11. Replace reverse shift rod, using same number of turns on the clevis as used in disassembly. Operate shift control. If adjustment is necessary see "SHIFT CONTROL ROD ADJUSTMENT."
12. Replace neutral lockout bracket on chain case.

DRIVE CHAIN

LUBRICATION

The drive chain and sprockets are lubricated by the chain running through an oil bath. Check oil level by removing oil level plug in the bottom of the chain case. Lubricant level should come up to bottom of oil level hole. Remove rubber plug and fill with Dexron ATF Lubricant. It will hold approximately 4 oz. Replace plugs. See Figure 10-17.

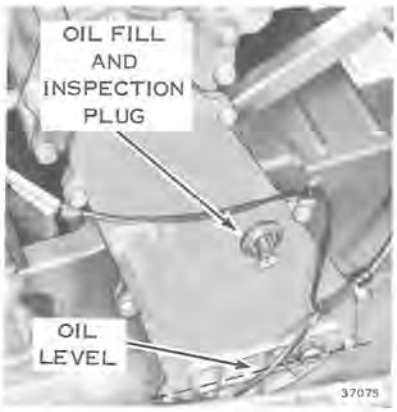

Figure 10-17

ADJUSTMENT

Chain adjustment must be done with transmission in forward position. Total slack must be 1/4" ± 1/16". See Figure 10-18.

CHAIN ADJUSTMENT INSTRUCTIONS

Rotate secondary drive pulley clockwise as seen from left side of machine until all slack in the chain is transmitted toward right side of chain case. Hold secondary pulley securely in clockwise position while checking chain adjustment. Remove chain inspection plug. Outer edge of chain should line up with left hand edge of hole. See Figure 10-17.

Figure 10-18

If the chain requires adjustment, use the following steps:

1. Loosen jam nut.
2. To tighten chain, turn adjusting screw clockwise, see Figure 10-18.
3. To loosen chain, turn adjusting screw counterclockwise.
4. Retighten jam nut to 10-12 ft. lbs.
5. When chain case cover is removed, apply OMC Adhesive M Part No. 318535 in groove of chain case prior to assembling seal. Insert seal into groove with joint in line with top right cover mounting screw hole. Replace chain case cover. Torque the screws to 60-80 in. lbs. Replace oil in chain case. See "Drive Chain Lubrication" above.

REMOVAL AND INSTALLATION

a. Remove chain case cover.
b. Loosen chain (see "ADJUSTMENT" above).
c. Remove screw and washer from upper drive shaft.
d. Remove sprocket and chain from upper shaft. Remove retaining ring to release idler sprocket if additional clearance is required to remove chain.
e. Chain can now be removed from lower sprocket.

INSTALLATION

a. Assemble in reverse order of disassembly.
b. Adjust chain per "ADJUSTMENT" above.
c. Add chain lubricant per "LUBRICATION" above.

SHEAVE ALIGNMENT

If chain case or engine has moved on chassis, sheave alignment must be checked as follows:

ALIGNMENT

Using service tool check for 3.58 ± .03 from outside edge of primary fixed sheave to outside edge of secondary fixed sheave at top and bottom of sheaves as shown in Figure 10-19. Long bar must line up with slot in short bar top and bottom, fore and aft. Fixed sheaves shall be parallel to within .030 inches measured off the balance pad. Center distance shall be 11.00 ± .03 inches. See Figure 10-19.

ADJUSTMENT PROCEDURES (See Figure 10-20)

NOTE

IT IS IMPORTANT TO MAINTAIN A CLEARANCE OF .005 between nut (1) and gearcase projection.

1. Loosen five chaincase support brackets to chassis screws.
2. Loosen two screws (2) through chassis into bottom of chaincase (see insert).
3. Chaincase and secondary sheave can now be moved.

NOTE

If additional movement is required to obtain proper alignment the front axle can be moved. See Page 11-4(h).

4. Adjust position of chaincase and secondary sheave so that it is aligned with primary sheave.
5. Tighten two screws (2) through bottom of chassis into chaincase.
6. Tighten two screws through chaincase support bracket into chaincase securely.
7. Tighten three screws through chaincase support bracket into chassis securely.
8. Check alignment again.
9. Torque all seven screws securing chaincase to 18-20 ft. lbs. Retighten axle if loosened. See Page 11-6 (f-h).
10. Check alignment again.

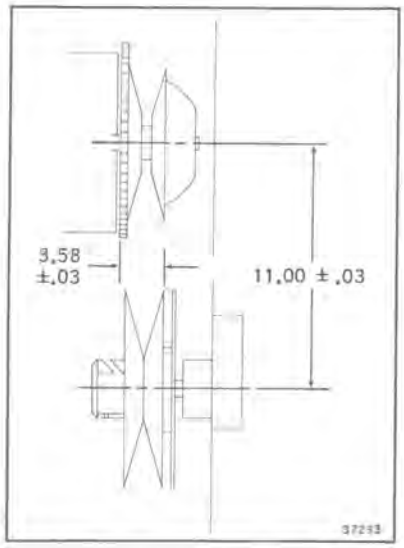

Figure 10-19

BRAKE

DESCRIPTION

The brake is caliper disc type with long lasting fibre pads (pucks).

ADJUSTMENT

Brake adjustments can be made by turning the adjustment nut (Ref. 1) clockwise to tighten brake. Turn the nut until there is a slight drag on the brake, then back the nut off. See Figure 10-21.

NOTE

Be certain there is proper movement of the brake lever control to permit use of the parking lock. Loosen control cable locknut (Ref. 2) and adjusting screw (Ref. 3) to obtain proper control lever movement. See Figure 10-21. Tighten locknut.

REMOVAL

a. Loosen brake adjustment nut. See Figure 10-21.
b. Remove cotter pin and washer from brake control pivot pin. Compress brake return spring and remove pivot pin from control cable.
c. Remove brake bracket to transmission screws.

After adjusting brake, check stoplamp to see if switch (Ref. 4) is adjusted properly. Adjust switch position by loosening and tightening lock nuts (Ref. 5).

REPAIR

a. Disassemble brake assembly as required, noting relative positions of components to assure correct reassembly (see Figure 10-21).

b. Inspect brake pucks. If the free floating puck is one half of its original 1/2" thickness, it should be replaced. When the fixed puck is worn so that there is only 1/32" protruding from the carrier, it should be replaced. Use a contact cement to secure new puck to carrier.

NOTE

Keep all oil and grease from puck surfaces.

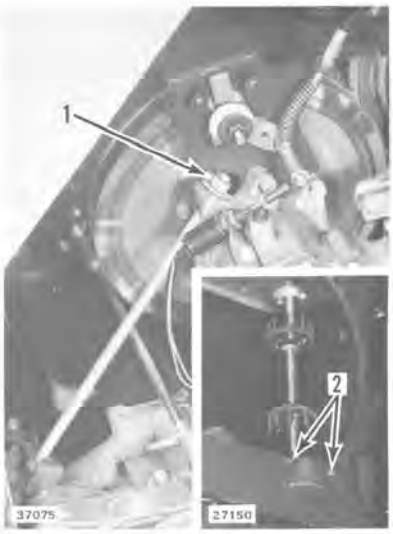

Figure 10-20

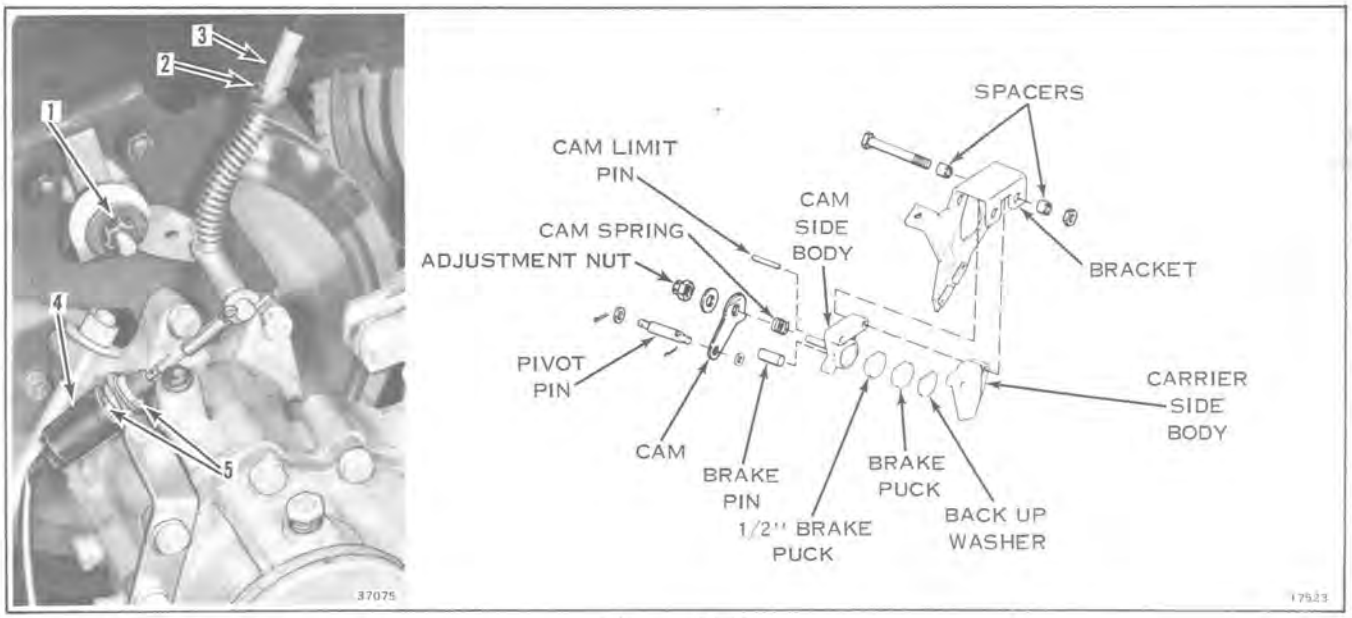

Figure 10-21

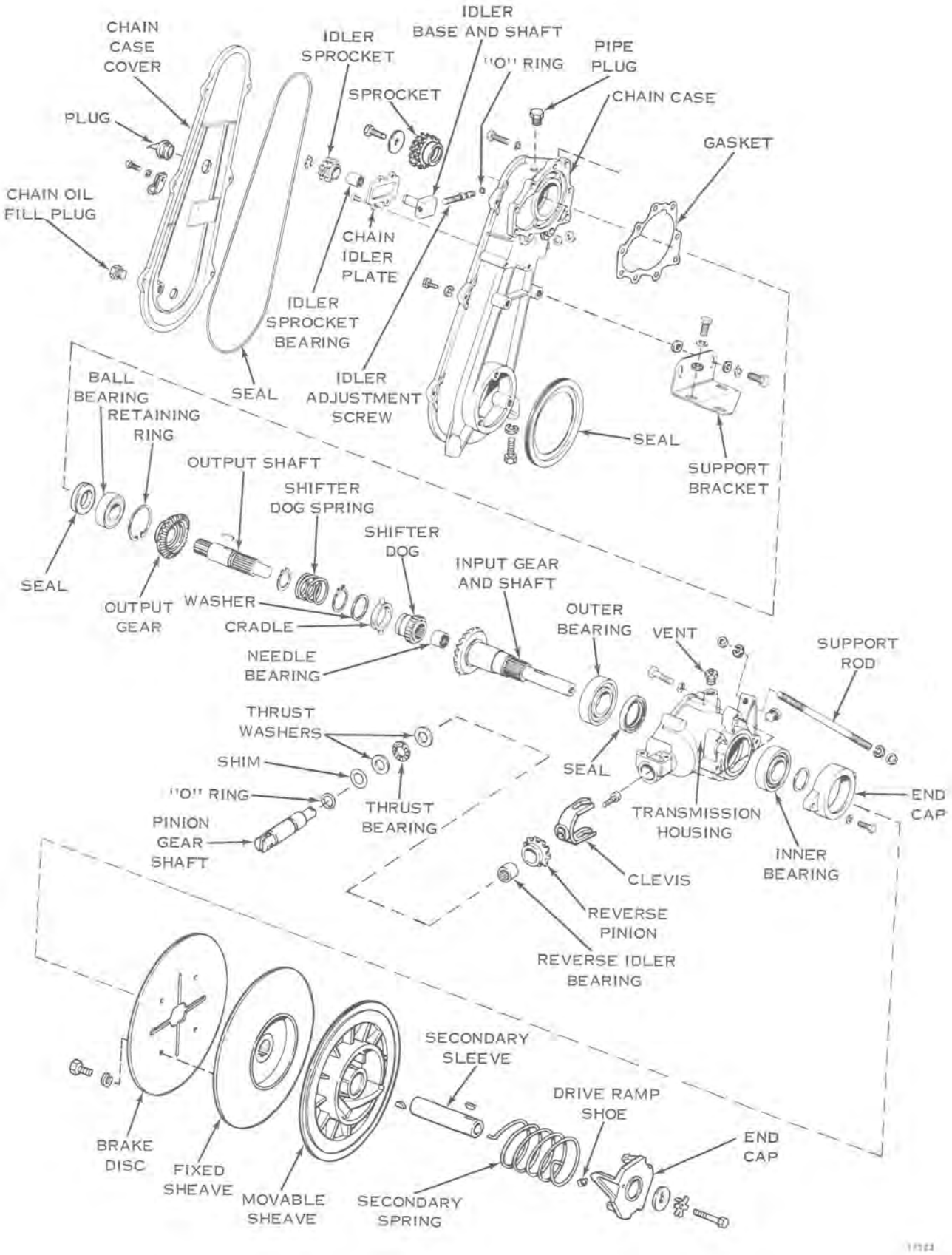
CHAIN CASE COVER
PLUG
CHAIN OIL FILL PLUG
IDLER SPROCKET
SPROCKET
IDLER BASE AND SHAFT
"O" RING
PIPE PLUG
CHAIN CASE
GASKET
CHAIN IDLER PLATE
IDLER SPROCKET BEARING
SEAL
IDLER ADJUSTMENT SCREW
SEAL
SUPPORT BRACKET
BALL BEARING
RETAINING RING
OUTPUT SHAFT
SHIFTER DOG SPRING
SHIFTER DOG
SEAL
OUTPUT GEAR
WASHER
CRADLE
NEEDLE BEARING
INPUT GEAR AND SHAFT
OUTER BEARING
VENT
SUPPORT ROD
THRUST WASHERS
SHIM
"O" RING
PINION GEAR SHAFT
THRUST BEARING
SEAL
TRANSMISSION HOUSING
END CAP
INNER BEARING
CLEVIS
REVERSE PINION
REVERSE IDLER BEARING
SECONDARY SLEEVE
DRIVE RAMP SHOE
END CAP
BRAKE DISC
FIXED SHEAVE
MOVABLE SHEAVE
SECONDARY SPRING

Figure 10-22

BRAKE CABLE AND CAM ASSEMBLY

a. Reassemble the brake and bracket assembly. Locknuts (2) on screws retaining the puck bodies must be tight.

b. Secure brake bracket to transmission.

c. Assemble brake adjusting screw and nut to brake bracket. See Figure 10-21.

d. Install return spring and pivot pin on control cable. Insert pivot pin into brake cam arm and secure with washer and cotter pin.

e. Adjust brake and control lever as described under "ADJUSTMENT." When brake is off, pucks should not drag on brake disc.

SECONDARY DRIVE

DISASSEMBLY

a. Remove transmission belt (see page 10-2).

b. Remove brake assembly (2 screws).

c. Remove screw, tab lockwasher, secondary washer, spring cap, spring, and sleeve. See Figure 10-22.

d. Slide movable and fixed sheaves from transmission input shaft.

NOTE

DO NOT strike sheaves with hammer. Cast aluminum sheaves will bend.

CLEANING, INSPECTION AND REPAIR

1. Clean all parts except movable sheave bushing in trichlorethylene. Bushing is oil impregnated. DO NOT clean with solvent. (See ⚠ SAFETY WARNING on page 10-4.)

2. Check bushing for wear.

3. Check shaft, sheaves, woodruff keys and Delrin ramp shoes for excessive wear. Check sleeve for burrs and nicks.

REASSEMBLY

a. Lubricate movable sheave bushing with OMC 262233. Use a small amount (0.3cc) in groove in bushing.

b. Assemble Secondary sheave assembly on transmission input shaft in reverse order of disassembly. Engage spring ends in holes in movable sheave and end cap. Preload spring by holding end cap stationary and rotating movable sheave clockwise to engage next ramp on end cap (approximately 1/3 turn). See Figure 10-22. Torque sleeve screw to 22-25 ft. lbs. torque and secure with lockwasher tabs. Replace transmission belt.

c. Check sheave alignment, See Page 10-6.

REVERSING TRANSMISSION

DESCRIPTION

In forward operation, the power flow from the secondary sheave is transmitted to the input shaft and gear directly to the clutch dog which engages the output shaft gear. Therefore input and output shafts rotate in the same direction. See Figure 10-23. At this time, the pinion gear shaft and pinion gear are retracted from the thru-shaft gears.

In reverse operation, the power flow from the secondary sheave to the input shaft and gear is, because of the release of the dog clutch and the engagement of the pinion gear (see Figure 10-24), transferred to the output gear and shaft in reverse rotation.

Linkage adjustment is important for proper reverse performance. See "REVERSING TRANSMISSION LINKAGE ADJUSTMENT" for adjustment information.

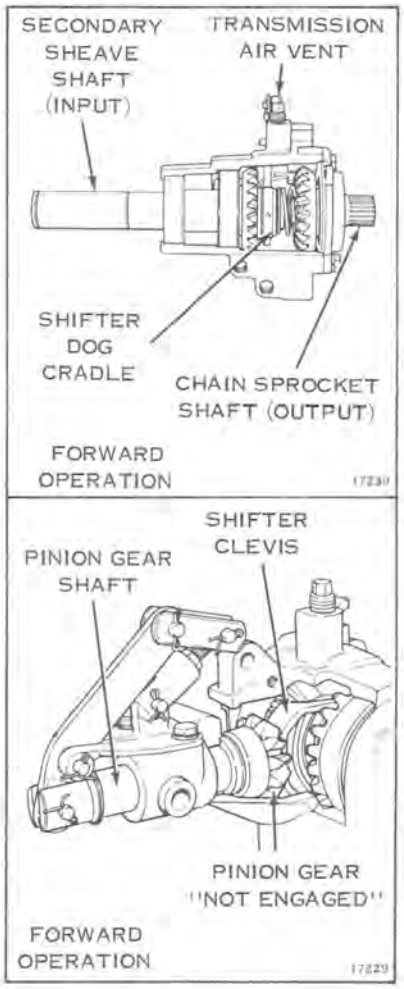

Figure 10-23

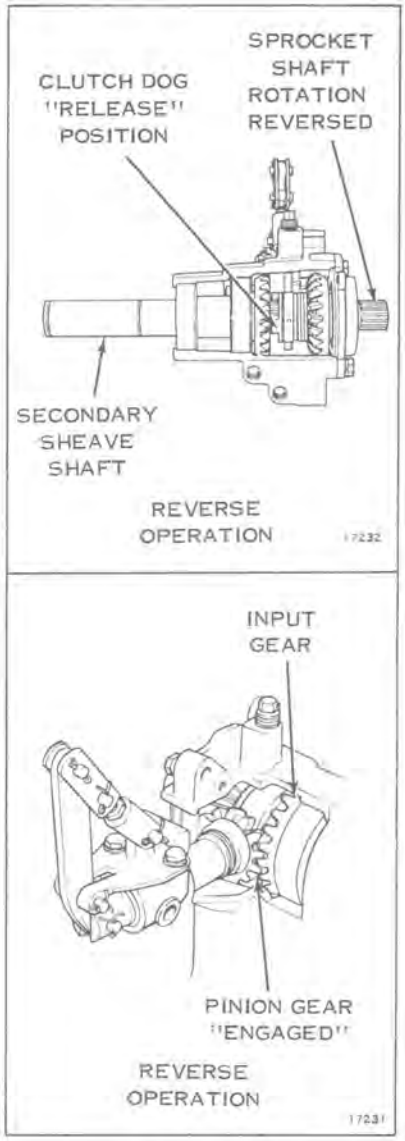

Figure 10-24

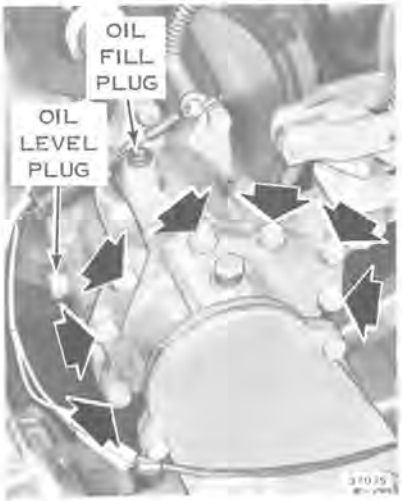

Figure 10-25

LUBRICATION

Use the following procedure to check the oil level in the reversing mechanism. See Figure 10-25.

1. Remove the oil level plug. If oil runs out, or is up to the threads in the hole, the level is satisfactory.
2. If oil level is low, remove the oil fill plug, and slowly pour Dexron ATF Lubricant in this hole until it runs out the lower hole.
3. Replace plugs.

REMOVAL AND DISASSEMBLY

a. Remove secondary drive as described under "SECONDARY DRIVE."

b. Remove upper chain sprocket and key from output shaft as described under "DRIVE CHAIN."

c. Remove transmission to chain case screws and lockwashers. See Figure 10-26.

d. Remove transmission housing from chain case. Output shaft assembly can now be removed.

e. Remove dog clutch assembly from shifter clevis.

f. Remove hex head socket screw from pinion gear shaft. See Figure 10-26. The shifter clevis, pinion gear, pinion bearing, thrust washers, thrust bearing and shims, if used, can be removed.

g. Remove end cap and bearing. Remove input shaft and gear. The pinion gear shaft and "O" ring can be removed when the linkage is disassembled from the shaft.

CLEANING, INSPECTION AND REPAIR

a. Clean all parts with a cleaning solvent such as Trichloroethylene and blow dry with compressed air. (See ⚠ SAFETY WARNING on page 10-4.)

b. Inspect shafts and output shaft splines for wear.

c. Turn bearings by hand; discard any which do not rotate smoothly or which have excessive play.

d. Inspect clevis, clutch dog, and cradle liner for wear or damage.

e. Inspect "O" ring on pinion gear shaft. Replace if required.

ASSEMBLY AND ADJUSTMENT

a. Install input shaft and gear. Use Loctite bearing mount on the O.D. and I.D. of the sealed bearings, see Figure 10-22.

b. Insert pinion shaft and assemble shim, thrust washer, thrust bearing, thrust washer, pinion gear and bearing assembly and shifter dog clevis.

c. Install output shaft, output gear and retaining ring. Install bearing in gearcase, using Loctite bearing mount on O.D. and I.D. Mount transmission to chain case with four screws. Gear backlash should be .004 - .006" when the pinion gear shaft retaining ring is held against the outside of pedestal housing. This may be adjusted by means of shims installed on the pinion shaft and these are available in .002, .003, .004, .005 inches. See Figure 10-26.

d. Remove housing, output shaft and gear. Apply Loctite stud lock to clevis socket screw. Complete pinion assembly.

e. Install clutch dog assembly and output gear on shaft splines and assemble transmission to chain case with six screws and lockwashers.

f. Install secondary sheave on input side as described under "SECONDARY DRIVE."

REVERSING TRANSMISSION LINKAGE ADJUSTMENT

DESCRIPTION

An "over center" type linkage is used to operate the reversing mechanism. This linkage, when correctly adjusted, provides an effect which locks the transmission firmly in the selected output rotation until the dash panel lever is moved.

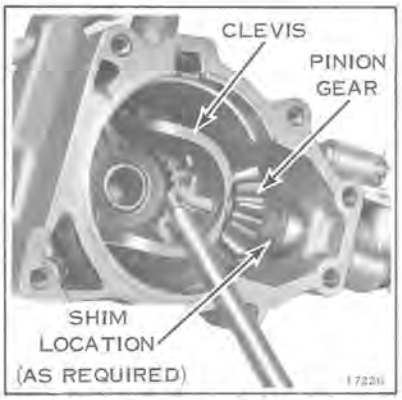

Figure 10-26

ADJUSTMENT

a. Be sure that the linkage has been correctly assembled. See Figure 10-27.

b. Loosen or remove dash panel shift control handle so that it will not affect linkage adjustment.

c. Loosen lock nut on reverse lock clevis and eyebolt assembly.

d. With the transmission in reverse (pinion shaft in), adjust reverse lock clevis so that the threaded eyebolt touches the pinion shaft link.

e. Tighten eyebolt lock nut. Check reverse locking by visually checking center lines of reverse lock clevis and lock plates. These centerlines must cross as shown in Figure 10-28.

SHIFT CONTROL ROD ADJUSTMENT

a. Assemble control rod thru dash panel.

b. Place transmission in forward operating position.

c. Attach end of control rod to linkage. See Figure 10-27. Attach assist spring.

d. Adjust shift control rod at connector and handle so that forward rod movement is limited at the dash panel by the shift handle locknut.

e. Check operation of shift mechanism, moving from forward to reverse several times. Use a quick, abrupt action. Be certain that the reverse lock clevis goes "over center" (see Figure 10-28) each time.

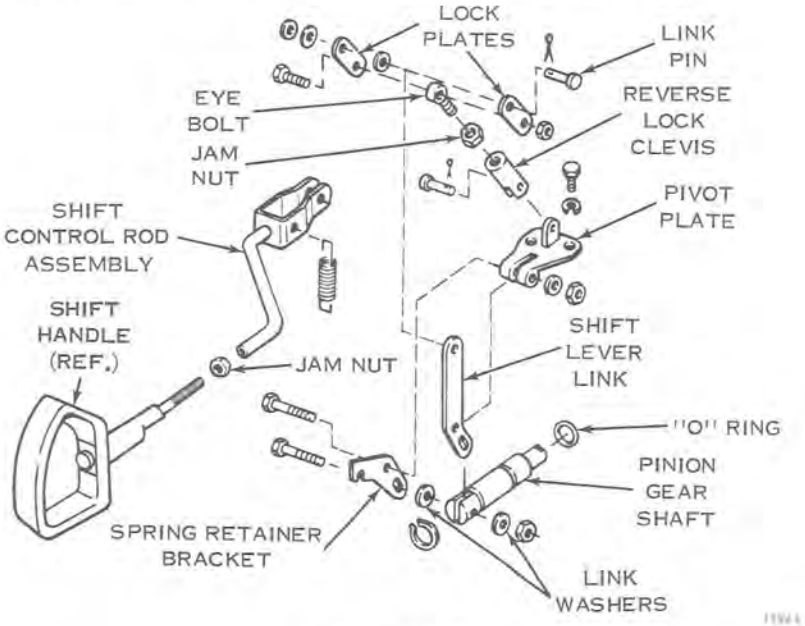

Figure 10-27

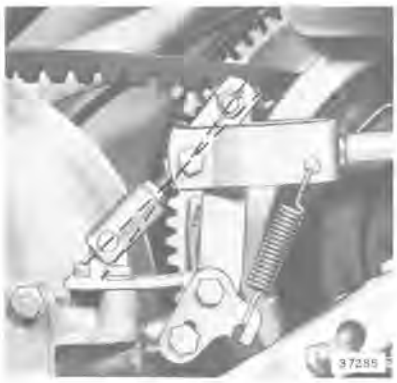

Figure 10-28

SECTION 11
STEERING, TRACK AND SUSPENSION

TABLE OF CONTENTS

DESCRIPTION 11-2

STEERING 11-2
- DISASSEMBLY 11-2
- CLEANING, INSPECTION, AND REPAIR 11-2
- REASSEMBLY 11-3
- SKI ALIGNMENT 11-3

TRACK AND SUSPENSION 11-3
- TRACK TENSION ADJUSTMENT 11-3
- TRACK ALIGNMENT ADJUSTMENT 11-3
- REMOVAL OF TRUCKS AND TRACK 11-4
- FRONT AXLE DISASSEMBLY 11-4
- REAR AXLE DISASSEMBLY 11-4
- TRUCK DISASSEMBLY 11-6
- CLEANING, INSPECTION, AND REPAIR 11-6
- FRONT AXLE ASSEMBLY 11-6
- IDLER ASSEMBLY 11-6
- TRUCK REASSEMBLY 11-7
- REAR AXLE ASSEMBLY 11-7

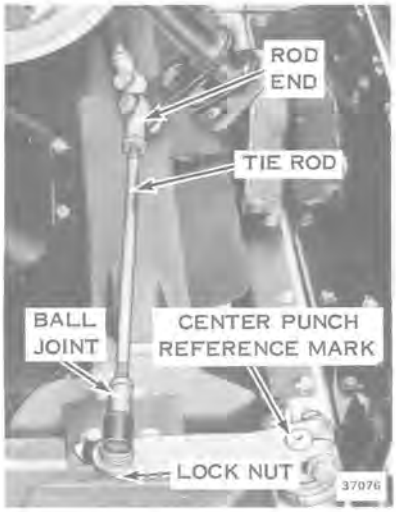

Figure 11-1

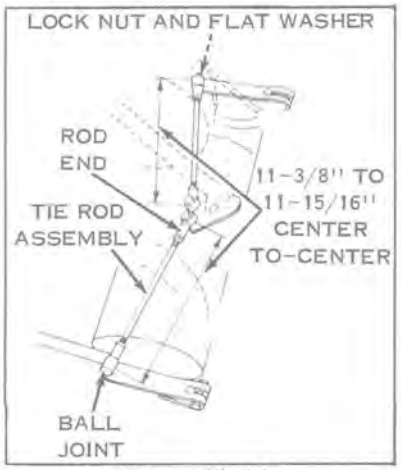

Figure 11-1A

DESCRIPTION

This section gives complete service instructions on the snowmobile steering, track, and suspension.

STEERING

DISASSEMBLY

a. Support front end of snowmobile to remove weight from skis.

NOTE

Mark ski column and steering arm with center punch as shown in Figure 11-1. Marking is required to assure correct steering geometry on reassembly.

b. Remove ski and leaf spring assembly. Disassemble leaf spring, if required, for servicing.

c. Identify ski columns as left or right for correct reassembly. Remove steering arm from ski column. See Figure 11-2.

d. Remove ski columns.

CLEANING, INSPECTION, AND REPAIR

a. Remove all dirt and old grease from ski columns and from inside ski column mounts and bushings.

b. Inspect steering column bushing and replace if worn. See Figure 11-2.

c. Inspect ski column upper and lower rubber mounts and bushings for wear, damage, or deterioration.

d. Inspect ski runners and replace if worn.

e. Inspect leaf springs for cracks or weakness.

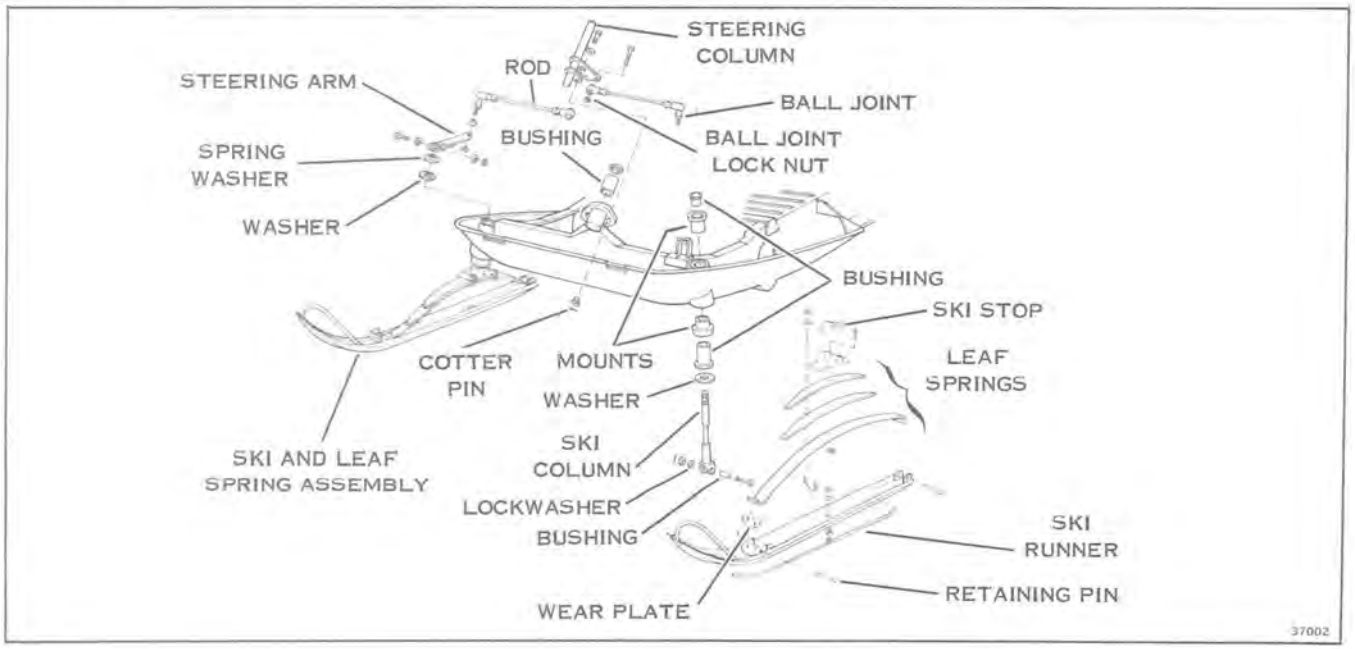

Figure 11-2

REASSEMBLY

a. Reassemble skis and springs, if these were disassembled. Refer to Section 2 for Torque.

b. Lubricate ski columns with OMC Part No. 114154 grease. Place ski and column assemblies in position in frame assembly. NOTE: DO NOT interchange right and left ski columns.

c. Attach steering arms to ski columns, using punch marks to obtain original position. Tighten to torque value shown in Section 2. Adjust ski alignment as described below.

d. Install ski and spring assembly to ski column and replace cotter pin.

SKI ALIGNMENT

The skis require alignment if the skis are not parallel with each other and the vehicle body when the steering bar is in the normal straight-driving position.

To align skis, proceed as follows:

a. Open hood.
b. Place steering bar in the normal straight-driving position.
c. Remove lock nut and flat washer from ball joint. See Figure 11-1A.
d. Turn rod assembly clockwise to toe skis out or counterclockwise to toe skis in.
e. When skis are parallel with each other and snowmobile body reassemble flat washer and lock nut on ball joint.

SAFETY WARNING

Minimum thread engagement of rod assembly into ball joint must be .500 inches. See Figure 11-3.

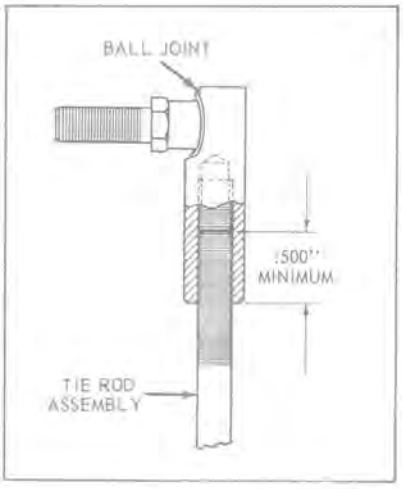

Figure 11-3

TRACK AND SUSPENSION

TRACK TENSION ADJUSTMENT

Track tension must be checked after the first ten hours of operation and then every 25 hours or as required to maintain efficient, economical operation. Improper adjustment will result in undue wear to the track and drive components.

Track tension is checked when the track is not supporting the weight of the snowmobile and the pivot arms are pulled down.

Track tension is correct if the distance from the bottom of the pivot arm bearing bore to the bottom of the chassis is 2-7/8" + 1/8" -0". See Figure 11-4.

If adjustment is necessary, perform the following steps on both sides of the vehicle.

a. Vehicle should be in right side up position with track off the ground.

b. Loosen track tension lock nuts and lock nut on pivot arm adjusting screw.

c. Turn pivot arm adjusting screws to obtain the correct track tension as shown in Figure 11-4. Measure distance from bracket to anchor on each side, Figure 11-4, dimension A. If measurements are not equal, loosen adjustment on the side with longest dimension until measurement is equal within 1/32". This is done by turning the pivot arm adjusting screw counterclockwise. Tighten all retaining nuts.

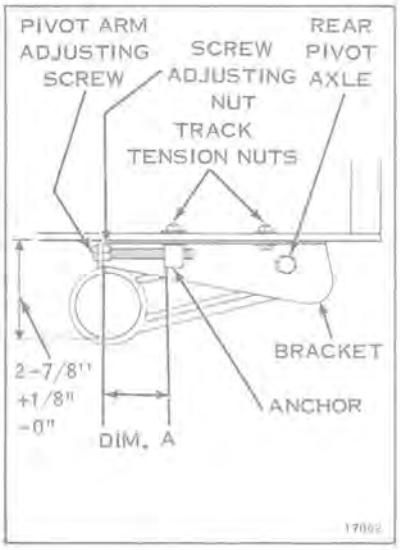

Figure 11-4

TRACK ALIGNMENT ADJUSTMENT

Proper track alignment is essential to keep sprocket and track wear at a minimum.

When aligning track, block up snowmobile so that track is off ground and place front edge of skis against stationary object. Start engine and run at idle allowing track to turn free. The track edges must have a minimum of 1/8" from edge of track to pivot arms as shown in Figure 11-5.

Figure 11-5

SAFETY WARNING

Do not run at high speed, keep clothing and hair away from track to avoid becoming entangled.

REMOVAL OF TRUCKS AND TRACK

a. Support snowmobile so that weight is removed from track.

b. Loosen track tension nuts. See Figure 11-4.

c. Release pivot axle spring. See Figure 11-6.

d. Remove screws retaining trucks to chassis. Bring truck assemblies out of chassis.

e. Remove rear axle bolts. Complete rear axle assembly can now be removed.

f. Remove chain case cover.

g. Remove retaining ring, sprocket and spacer from end of axle. See Section 10.

h. Loosen set screws from bearing locking collars and rotate collars clockwise to free axle from bearings.

i. Remove three screws - flangette to chain case - on left side of vehicle and three screws - flangette to chassis - on right side of vehicle.

j. Remove front axle from chassis.

k. Remove screw and washer from each end of idler axle. Remove idler assembly.

l. Track is now free to be removed from snowmobile.

Figure 11-6

FRONT AXLE DISASSEMBLY

a. Remove bearings and flangettes from axle.

b. Drive out roll pins from track drive sprockets.

c. Press drive sprockets off front axle after marking position for reassembly.

REAR AXLE DISASSEMBLY

a. Remove retaining ring and bearing retainer.

b. Push pivot arm towards wheel.

c. Remove bearing.

d. Loosen Allen set screws and remove wheels from axle.

SAFETY WARNING

If heat is necessary to remove, or reassemble rear axle wheels, do not use open flame because of danger of igniting the magnesium metal.

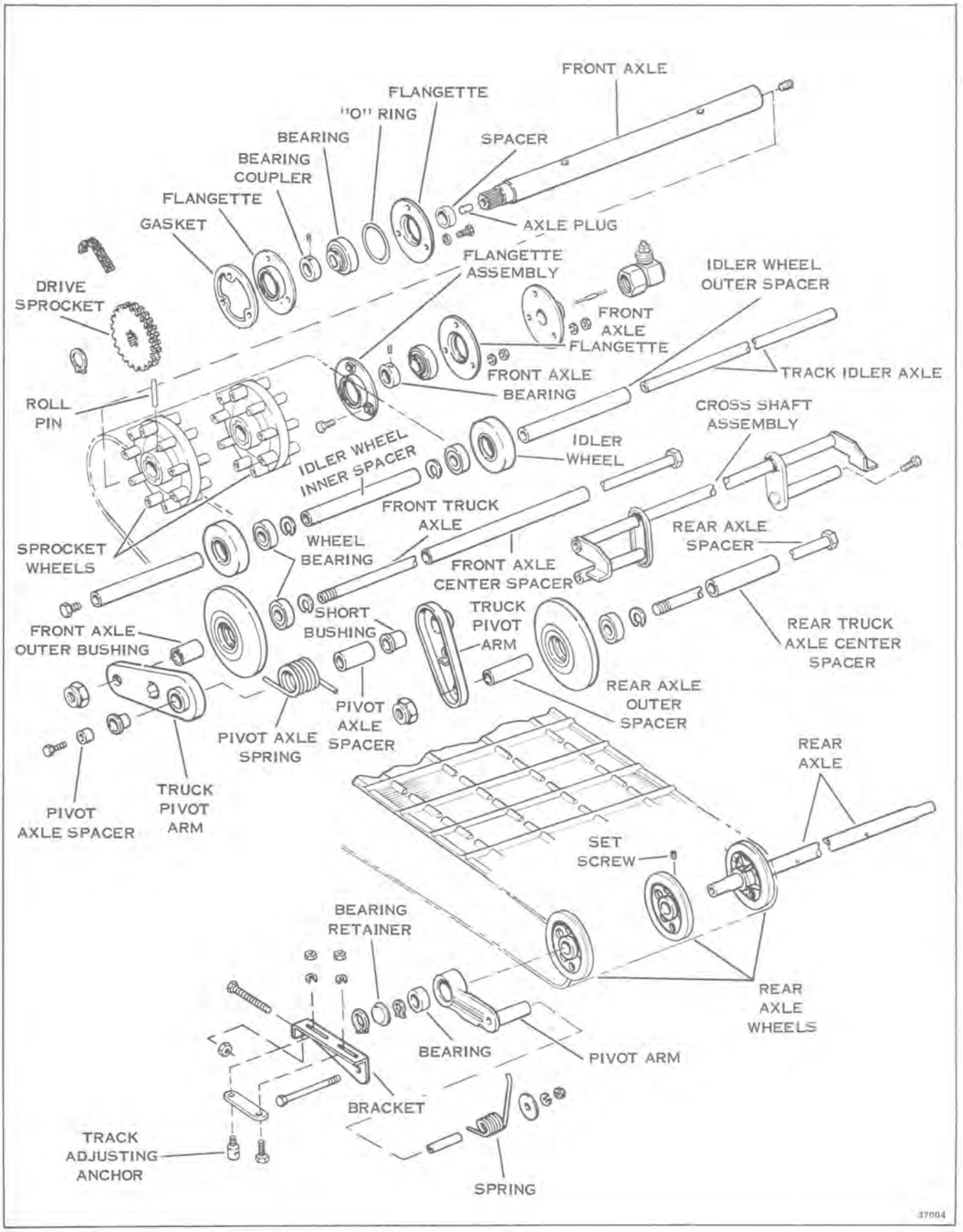
FRONT AXLE
FLANGETTE
"O" RING
BEARING
SPACER
BEARING COUPLER
FLANGETTE
GASKET
AXLE PLUG
FLANGETTE ASSEMBLY
IDLER WHEEL OUTER SPACER
DRIVE SPROCKET
FRONT AXLE FLANGETTE
FRONT AXLE BEARING
TRACK IDLER AXLE
ROLL PIN
CROSS SHAFT ASSEMBLY
IDLER WHEEL
IDLER WHEEL INNER SPACER
FRONT TRUCK AXLE
REAR AXLE SPACER
SPROCKET WHEELS
WHEEL BEARING
FRONT AXLE CENTER SPACER
SHORT BUSHING
TRUCK PIVOT ARM
REAR TRUCK AXLE CENTER SPACER
FRONT AXLE OUTER BUSHING
REAR AXLE OUTER SPACER
PIVOT AXLE SPACER
PIVOT AXLE SPRING
REAR AXLE
TRUCK PIVOT ARM
PIVOT AXLE SPACER
SET SCREW
BEARING RETAINER
REAR AXLE WHEELS
BEARING
PIVOT ARM
BRACKET
TRACK ADJUSTING ANCHOR
SPRING
37004

Figure 11-7

Figure 11-8

Figure 11-9

Figure 11-10

TRUCK DISASSEMBLY

a. Remove nuts from each end of front and rear truck axles.

b. Remove pivot arms, spacers, bushings, and springs from pivot axles.

c. Wheels and spacers will now slide off front and rear truck axles.

CLEANING, INSPECTION, AND REPAIR

A torn track cannot be vulcanized, it must be replaced.

Liquid neoprene can be applied to a frayed track to help restore its original appearance.

Bearings are sealed, therefore require no greasing. Turn bearings by hand. Sealed bearings do not turn freely, but if they are rough, they must be replaced.

Axles - check for straightness by rolling on a flat surface. Replace if bent.

Splines - inspect for excessive wear.

Sprockets - Check for excessive wear, or coating peeling or worn off.

Oil plug must be in good condition, and placed in front axle (spline end) to retain oil in chain case.

Check condition of seals.

Check nylon truck bushings for cracks or excessive wear. Replace if damaged.

FRONT AXLE ASSEMBLY (See Figure 11-7)

a. Assemble bearings, flangette gasket and "O" ring to chain case.

b. Assemble flangette assembly, bearing and flangette to right end of axle.

c. Insert left end of axle thru bearing in chain case far enough so that right end of axle can be secured to chassis.

d. Tighten 6 screws through flangettes. Torque to 20-25 ft. lbs. (Axle should be able to slide back and forth in bearings.)

e. Assemble spacer and sprocket with chain and retaining ring to left end of axle in chain case.

f. Pull axle to right side to take up space between sprocket, spacer, retaining ring and bearings on left end of axle.

g. Rotate collar in direction of axle rotation on both bearings to tighten collar on bearing. Use pin punch and hammer to make sure collar is tight on bearing. See Figure 11-8.

h. Apply locktite screw lock to set screws on collar and torque to 25-35 in. lbs. See Figure 11-9.

IDLER ASSEMBLY

a. Assemble idler wheels to shaft with retaining rings to inside to chassis.

b. Assemble idler wheels inside of track. Torque idler axle screws to chassis 20-25 ft. lbs. See Figure 11-10.

TRUCK REASSEMBLY

1. Assemble wheels and spacers to their original positions on the front and rear truck axles. Application of a light oil on the axles will assist in this procedure. Apply OMC Part No. 114154 grease to nylon bushings and assemble to axles. Assemble pivot arms and springs.

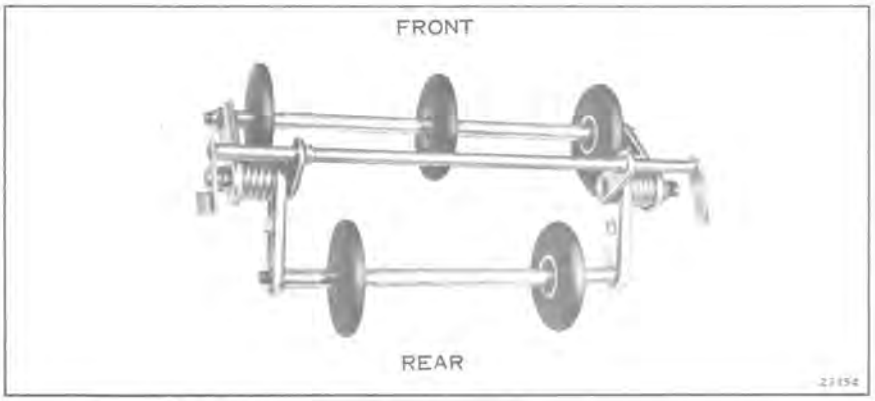

Figure 11-11

REAR AXLE ASSEMBLY

a. For sequence of assembly of wheels, bearings, pivot arms, and brackets refer to Figures 11-5 and 11-7.

b. Lubricate the outside of the pivot bushing with OMC Part No. 114154 grease.

c. Lubricate outside face of pivot arm side with OMC Part No. 114154 grease.

d. Apply Loctite grade A to the wheel set screws prior to assembly. Torque set screws to 18-20 ft. lbs.

e. Torque rear axle pivot nuts to 12-15 ft. lbs. Axle must rotate freely when assembled to chassis. Pivot arms must rotate on bushings with no binding or other restriction.

SECTION 12
LUBRICATION AND STORAGE

TABLE OF CONTENTS

ENGINE LUBRICATION 12-2

LUBRICATION RECOMMENDATIONS 12-4

PREVENTIVE MAINTENANCE 12-5
AIR FILTER 12-5

FUEL FILTER 12-5

STORAGE 12-6
PREPARATION FOR STORAGE 12-6
REMOVAL FROM STORAGE 12-6

ENGINE LUBRICATION

Since fuel vapors are first passed thru the crankcase of the R.C. engine, the most practical method of lubrication is by mixing the lubricant with the gasoline. As the mixture of lubricant and gasoline enters the crankcase, the gasoline is vaporized, leaving the lubricant to lubricate the bearings, seals and chamber surfaces. Eventually the lubricant reaches the combustion chamber where it is burned and discharged through the exhaust ports. In this way the fuel mixture conveys to the engine's moving parts a metered amount of lubricant in proportion to the speed of the engine.

Both optimum performance and lubrication depend on maintaining the correct ratio between gasoline and lubricant in the fuel mixture. The use of too little lubricant leads to premature wear and early breakdown. A fuel mixture richer in lubricant than recommended is not only wasteful but will contribute to faulty performance, and to excessive carbon accumulation in the rotor chamber and on the spark plug. Frequent spark plug replacement can often be traced to an excess of lubricant in the fuel mixture. Instructions for the mixing of fuel during break-in and normal operation as given here and in the Owner Manual should be followed exactly.

The use of additive compounds, such as tune-up compounds, tonics, friction reducing compounds, etc., is discouraged.

To avoid insufficient lubrication and premature engine wear, it is important that the gasoline and lubricant be properly mixed prior to putting the fuel in the tank. This is especially true in zero or sub-zero climates. Unless the fuel and lubricant are properly mixed, the engine could operate on a mixture which is too lean until the gasoline and lubricant have been agitated; by then, damage would have occurred.

The correct fuel mixture ratio is 50:1 or 1 pint of lubricant to 6 U.S. gallons (4.8 Imperial gallons) of gasoline. (See inside front cover.)

NOTE

DO NOT POUR GASOLINE OR LUBRICANT DIRECTLY INTO VEHICLE FUEL TANK. USE AN APPROPRIATE CONTAINER FOR MIXING AND STORING THE FUEL.

To prepare the snowmobile fuel properly, pour into a SEPARATE, clean container half the amount of a good grade of regular leaded or unleaded gasoline required and add all the required lubricant. Thoroughly agitate this partial mixture. Next, add the balance of gasoline necessary to bring the mixture to the required ratio of 50:1. Again, thoroughly agitate the mixture. A clean funnel equipped with a fine screen should be used when pouring the fuel mixture into the vehicle tank.

Rotating combustion lubricant is prediluted to provide excellent mixability with gasoline at low temperatures. The addition of this dilutant does not in any way affect the lubrication qualities of the lubricant.

Whenever it is necessary to mix fuel and lubricant at temperature below 32°F (0°C), the lubricant should be prediluted with gasoline to improve its mixability. The lubricant should be prediluted with approximately one part gasoline to one part lubricant. Predilution of the lubricant should take place with the lubricant temperature above 32°F.

Do not use kerosene or fuel oils for pre-mixing.

NOTE: Thorough agitation is required to completely mix or blend the fuel; the lubricant adheres to the bottom and sidewalls of the container unless agitated. Simply pouring the gasoline onto the lubricant CANNOT accomplish thorough mixing.

LUBRICATION RECOMMENDATIONS

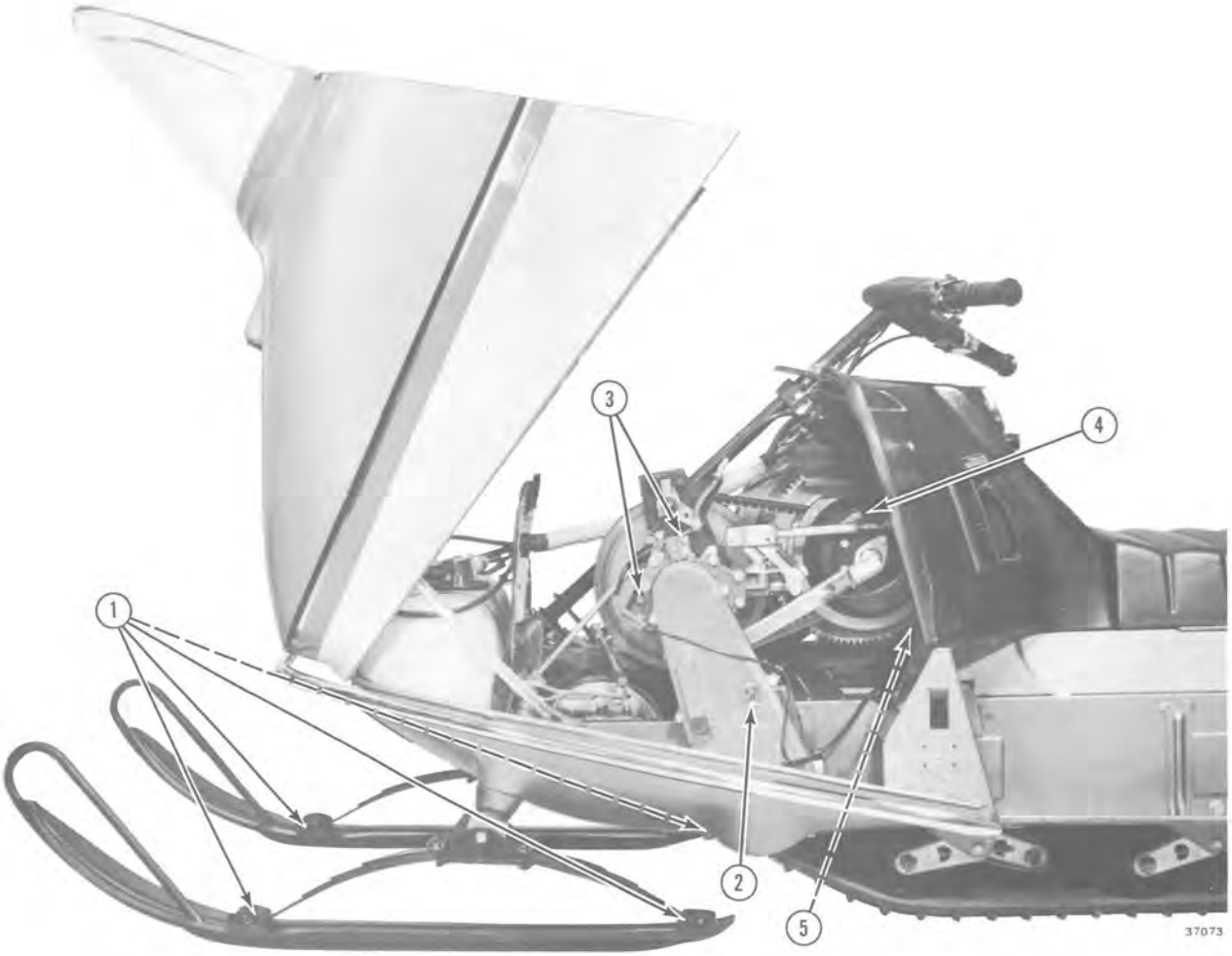

Figure 12-1

TIME	MAINTENANCE	LUBRICANT
Every 25 hrs.	(1) Ski Pivots (leaf spring connections to skis)	SAE #10 oil
After 10 hrs. then every 25 hrs. of operation	(2) Drive Chain - oil bath. See page 10-5	Dexron ATF
	(3) Reversing transmission. See page 10-10.	Dexron ATF
Once a season (normal use) Twice a season (extended use)	(4) Primary Drive (disassembly required, see your dealer)	Lubriplate 907 (OMC Part No. 114154)
Every 50 hrs.	(5) Starter drive shaft. See page 7-21	Lubriplate 777

Specified lubricants available from your dealer.

PREVENTIVE MAINTENANCE

TIME	MAINTENANCE
After first 3 hrs., then every 10 hrs. or as required	Adjust Chain Tension See Page 10-5
After first 10 hrs., then every 25 hrs. or as required	Adjust Track Tension Check Track Alignment (See Section 11)
Twice a season (see below)	Clean Air Filter
Once a season (see below)	Clean or install new Fuel Pump Filter Screen

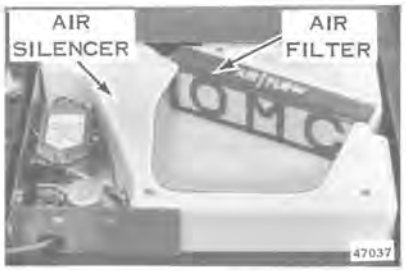

Figure 12-2

AIR FILTER

The carburetor is equipped with an air filter that should be cleaned during the operating season. To remove air filter, remove five screws and cover on top of air silencer. See Figure 12-2. Air filter can now be lifted out of air silencer. Shake the filter to clean it. When it can no longer be cleaned in this manner, replace it. When reinstalling air filter be certain to observe direction of air flow through filter as marked. Never run engine without an air filter. It is essential for proper carburetor calibration.

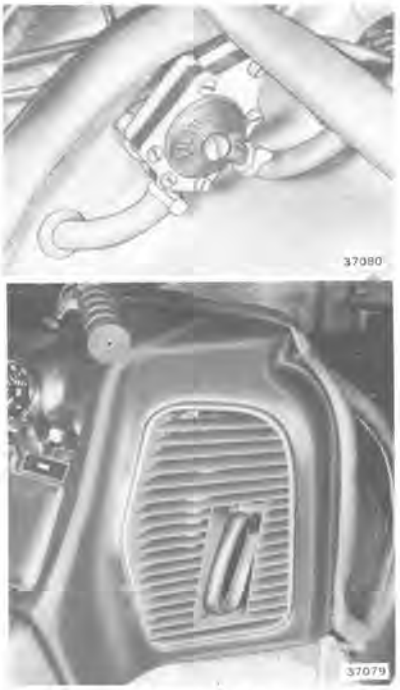

Figure 12-3

FUEL FILTER

SAFETY WARNING

Exercise care to prevent fuel spillage when removing fuel filter when engine is hot. Fuel in filter could drip on hot engine or muffler and ignite.

The fuel filter is located in front of the right side of the instrument panel, above the manual starter. See Figure 12-3. The fuel filter can be removed from the fuel pump to inspect for sediment or water accumulation. Reach behind the instrument panel, and with a coin, back off the mounting screw approximately three turns (counterclockwise). Remove the cover together with the screen, gasket and mounting screw. Remove and wash filter screen with clean solvent and brush. Assemble filter as shown in Figure 12-4, being careful to assemble gasket and filter screen on fuel filter cover. Tighten mounting screw securely with coin (do not over-tighten).

Figure 12-4

STORAGE

PREPARATION FOR STORAGE

a. Drain fuel tank. Use siphon hose thru filler opening.

b. Run engine with neutral control knob pulled out until balance of fuel in carburetor and lines is consumed.

c. Remove spark plug.

d. Pour a tablespoon of OMC Rotary Combustion Oil into combustion chamber thru spark plug hole and turn the eccentric shaft one complete revolution. Again pour a tablespoon of the oil into the second chamber and turn the eccentric shaft one revolution. Repeat by pouring oil into the third chamber and turning the eccentric shaft several revolutions to distribute the oil.

or

Remove primer line from carburetor. Pump OMC Rotary Combustion oil into the primer line fitting on the carburetor while engine is running, until balance of fuel in carburetor and lines is consumed. See Fuel Line Tie Strap, page 6-9 for reassembly of primer line.

e. Wash machine. Be certain to hose out undercarriage. Clean seating with automotive foam type upholstery cleaner.

f. Remove fuel pump filter screen and clean or replace. See Page 12-5.

g. Clean or replace air filter. See page 12-5.

h. Provide for proper battery maintenance, as described in Section 7.

i. Remove transmission belt. See Section 10.

j. Block front and rear of unit off ground to take weight off track and skis.

k. Rub bottom of skis, and other unprotected surfaces of vehicle with cloth saturated in OMC Rust Preventative.

l. Store in dry, well-ventilated area.

⚠ SAFETY WARNING

To prevent possible explosion or ignition of vaporized fuel, do not store snowmobile with fuel in tank or carburetor in enclosure with open flame. (EXAMPLE: Furnace or water heater pilot light.)

REMOVAL FROM STORAGE

a. Fill tank with fresh fuel mixture. Install battery.

b. Tune-up engine (see Section 5).

c. Lubricate all points, as described under "Lubrication."

d. Adjust track for proper tension, and check track alignment (see Section 11).

e. Align skis (see Section 11).

f. Check brake and throttle control adjustments.

g. Tighten all screws and nuts.

h. Clean inner surfaces of primary and secondary sheave halves of oil and grease. Replace transmission belt.

i. Test vehicle, checking particularly the following items:

1. Function of neutral control
2. Function of brake
3. Engine performance

j. Thoroughly clean any surfaces that need refinishing, and touch-up.