BOA-SKI. INC.

LA GUADELOUPE, CTE FRONTENAC, P.Q.

DESCRIPTION
ET
LISTE DE PIECES.

DESCRIPTION
AND
PARTS LIST.

1972

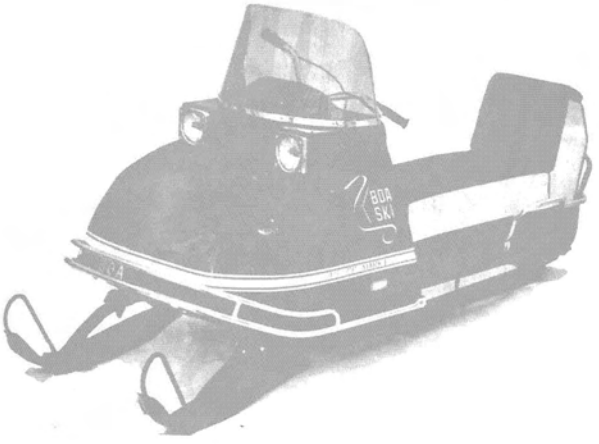

MODELE.

MARK I 292
MARK I 292 E
MARK I 338
MARK I 438
MARK I 438 E
MARK I 493
MARK I 493 E
MARK I 340
MARK I 340 E

MODEL.

MARK II R/T 340 J
MARK II R/T 340 K
MARK II R/T 340 EK
MARK II R/T 440 K
MARK II R/T 440 EK
MARK II R/T 440 J
MARK II W/T 340 K
MARK II W/T 440 K
MARK II W/T 440 EK

CABINE. CAB.

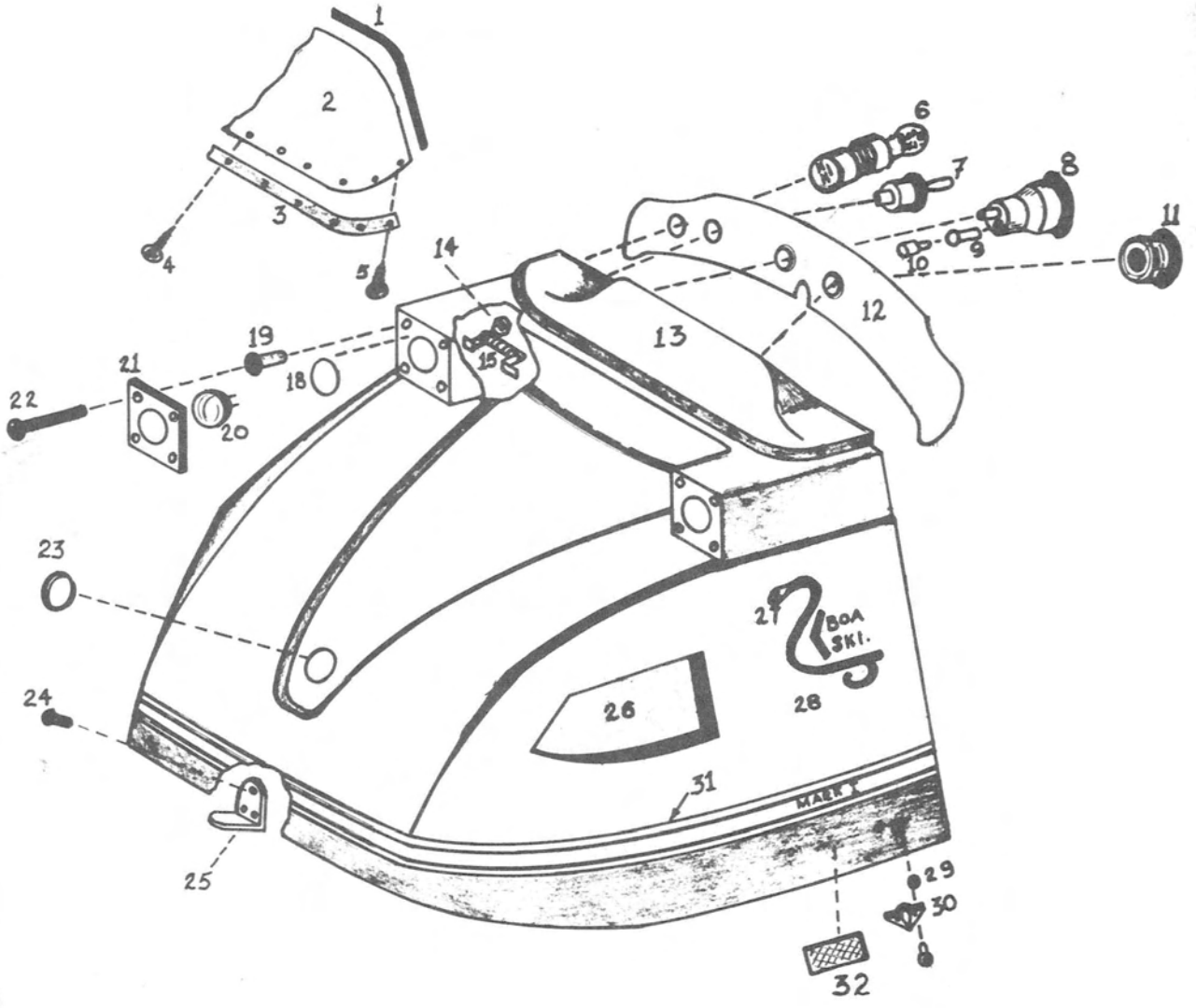
1
2
3
4
5
6
7
8
9
10
11
12
13
14
15
18
19
20
21
22
23
24
25
26
27
28
29
30
31
32
BOA SKI.
MARK X

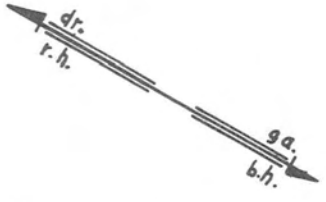
dr.
r.h.
sg.
l.h.

No. illus.	NEW PART NO.		CABINE	CAB	MODEL	MK 1 292	MK 1 292 E	MK 1 338	MK 1 340	MK 1 340 E	MK 1 338	MK 1 338 E	MK 1 493	MK 1 493 E
			DESCRIPTION											
1	S-73-01-035		Garniture pare-brise	Windshield trimming		1	1	1	1	1	1	1	1	1
2	S-73-01-032		Pare-brise	Windshield		1	1	1	1	1	1	1	1	1
3	S-13-01-009		Moulure pare-brise	Windshield moulding		1	1	1	1	1	1	1	1	1
4	S-00-07-002		Vis	Screw		7	7	7	7	7	7	7	7	7
5	S-00-07-003		Vis	Screw		2	2	2	2	2	2	2	7	2
6	S-00-13-004		Interrupteur @ clef	Ignition switch		1	1	1	1	1	1	1	1	1
7	S-00-14-003		" d'urgence	Emergency switch		1		1	1		1		1	
8	S-00-14-001		Indicateur de vitesse	Speedometer		OPTIONNEL								
9	S-00-13-013		Receptacle	Socket			"		"					
10	S-00-13-014		Ampoule	Bulb			"		"					
11	S-73-01-036		Tachymètre	Tachometer			"		"					
12	S-73-01-030		Décalque Tableau bord	Dash decal		1	1	1	1	1	1	1	1	1
13	S-73-02-014		Cabine	Cab		1	1	1	1	1	1	1	1	1
14	S-00-03-016		Ecrou	Nut		2		2	2		2		2	
15	S-00-13-007		Résistance	Resistor		1		1	1		1		1	
18	S-13-01-011		Joint d'étanchéité	Gasket		2	2	2	2	2	2	2	2	2
19	S-00-03-011		Ecrou d'ancrage	Molly jack nut		8	8	8	8	8	8	8	8	8
20	S-00-13-005		Phare scellé	Seales beam		2	2	2	2	2	2	2	2	2
21	S-13-01-008		Encadrement phare	Head lamp ring		2	2	2	2	2	2	2	2	2
22	S-00-07-001		Boulon	Bolt		8	8	8	8	8	8	8	8	8
23	S-13-02-006		Rondelle de caoutchouc	Rubber washer		1	1	1	1	1	1	1	1	1
24	S-00-02-004		Rivet	Rivet		7	7	7	7	7	7	7	7	7
25	S-13-01-002		Langue	Hood bracket (front)		1	1	1	1	1	1	1	1	1
26	S-73-01-012		Prise d'air gauche	Side scoop L.H.		1	1	1	1	1	1	1	1	1
-	S-73-01-011		" " droite	Side scoop R.H.		1	1	1	1	1	1	1	1	1
27	S-73-01-019		Ecusson Boa Gauche	Boa crest L.H.		1	1	1	1	1	1	1	1	1
-	S-73-01-020		" " droite	Boa crest R.H.		1	1	1	1	1	1	1	1	1
28	S-73-01-023		Decalque 292 cc.	Sticker 292 cc.		1	1							
-	S-73-01-025		" 338 cc.	" 338 cc.				1						
-	S-73-01-027		" 438 cc	" 438 cc.					1	1				
-	S-73-01-028		" 493 cc	" 493 cc.							1	1	1	1
29	S-00-12-005		Rondelle	Flat washer		4	4	4	4	4	4	4	4	4
30	S-00-19-004		Attache cabine	Hood bracket		2	2	2	2	2	2	2	2	2
31	S-73-01-016		" gauche	" " L.H.		1	1	1	1	1	1	1	1	1
-	S-73-01-015		" droite	" " R.H.		1	1	1	1	1	1	1	1	1
32	S-00-13-027		Réflecteur (jaune)	Reflector		2	2	2	2	2	2	2	2	2

CABINE. CAB.

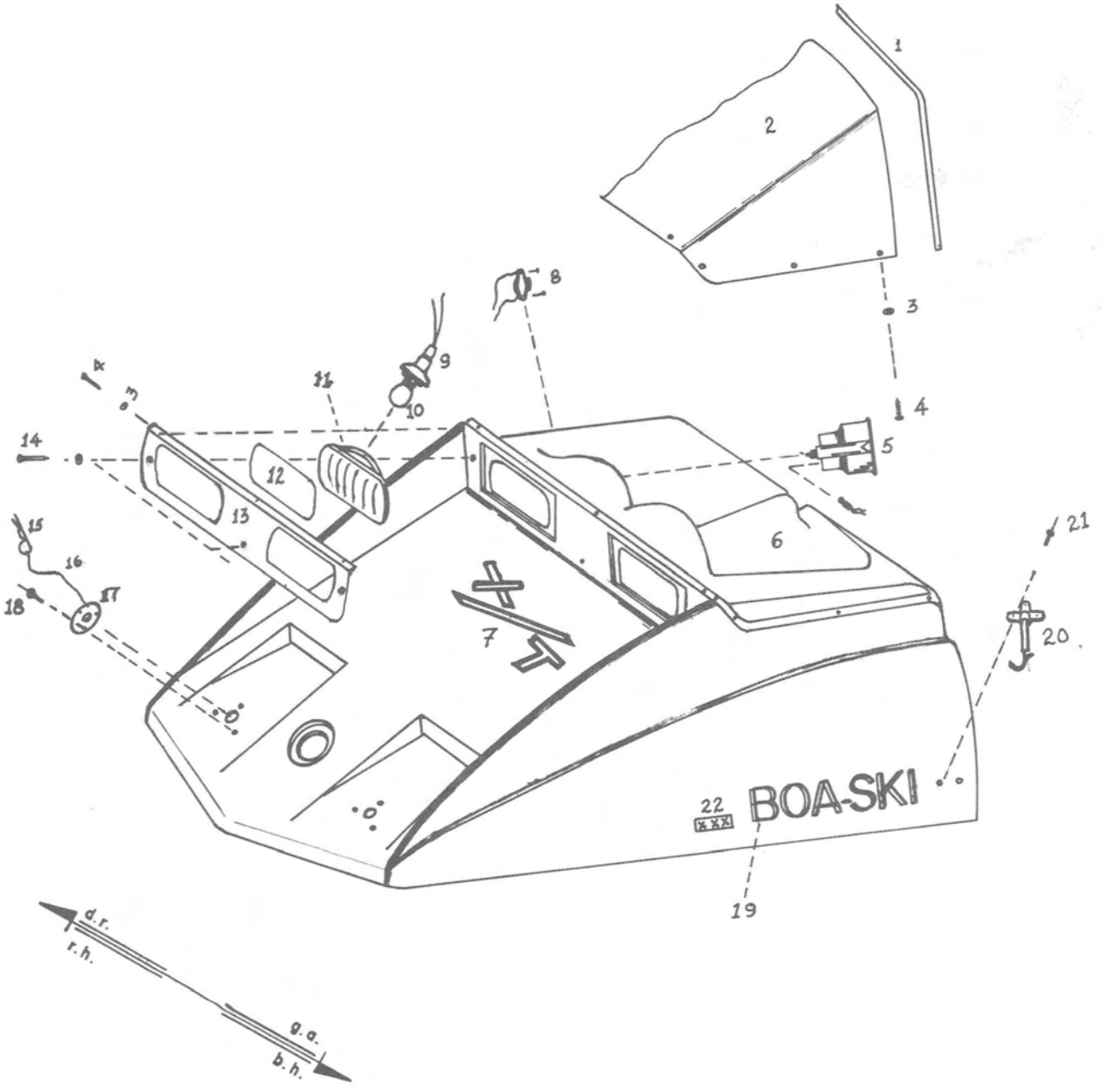

No. illus.	NEW PART NO.		CABINE	CAB	MODEL	MK 11 R/T 340 J.	MK 11 R/T 340 K	MK 11 R/T 340 K	MK 11 R/T 440 K	MK 11 R/T 440 EK	MK 11 R/T 440 J			MK 11 W/T 340 K	MK 11 W/T 440 K	MK 11 W/T 440 K				
			DESCRIPTION																	
1	S-73-02-002		Garniture pare-brise	Windshield trimming		1	1	1	1	1	1			1	1	1				
2	S-73-02-001		Pare-brise	Windshield		1	1	1	1	1	1			1	1	1				
3	S-00-12-011		Rondelle	Washer		12	12	12	12	12	12			12	12	12				
4	S-00-07-006		Vis	Screw		11	11	11	11	11	11			11	11	11				
5	S-00-14-001		Indicateur vitesse	Speedometer		1	1	1	1	1	1									
-	S-00-14-005		" "	"										1	1	1				
-	S-00-13-013		Réceptacle	Socket		1	1	1	1	1	1			1	1	1				
-	S-00-13-014		Ampoule	Bulb		1	1	1	1	1	1			1	1	1				
6	S-73-02-003		Cabine	Cab		1	1	1	1	1	1			1	1	1				
7	S-73-02-004		Decalque R/T	Sticker R/T		1	1	1	1	1	1									
-	S-73-02-005		" W/T	" W/T										1	1	1				
8	S-00-13-047		Regulateur voltage	Voltage regulator		1	1		1		1			1	1					
9	S-00-13-048		Réceptacle	Socket		2	2	2	2	2	2			2	2	2				
10	S-00-13-049		Ampoule	Bulb		2	2	2	2	2	2			2	2	2				
11	S-00-13-050		Lampe	Lamp		2	2	2	2	2	2			2	2	2				
12	S-13-02-003		Joint d'étanchéité	Gasket		2	2	2	2	2	2			2	2	2				
13	S-13-02-001		Contour lampe	Lamp housing		1	1	1	1	1	1			1	1	1				
14	S-00-07-001		Boulon	Machine screw		2	2		2		2			2	2					
15	S-00-19-018		Crochet	Hook		2	2	2	2	2	2			2	2	2				
16	S-13-02-004		Fil	Wire		2	2	2	2	2	2			2	2	2				
17	S-13-02-005		Plaque	Plate		2	2	2	2	2	2			2	2	2				
18	S-00-02-001		Rivet	Rivet		3	3	3	3	3	3			3	3	3				
19	S-73-02-006		Decalque	Sticker		2	2	2	2	2	2			2	2	2				
20	S-00-19-019		Attache cabine	Hood clamp		2	2	2	2	2	2			2	2	2				
21	S-00-02-004		Rivet	Rivet		4	4	4	4	4	4			4	4	4				
22	S-73-02-007		Decalque R/T 340	Sticker R/T 340		2	2													
-	S-73-02-008		" R/T 340 E	" " 340 E				2												
-	S-73-02-009		" R/T 440	" " 440					2		2									
-	S-73-02-010		" R/T 440 E	" " 440 E						2										
-	S-73-02-011		" W/T 340	" W/T 340										2						
-	S-73-02-012		" W/T 440	" W/T 440											2					
-	S-73-02-013		" W/T 440 E	" W/T 440 E												2				

MOTEUR. ENGINE.

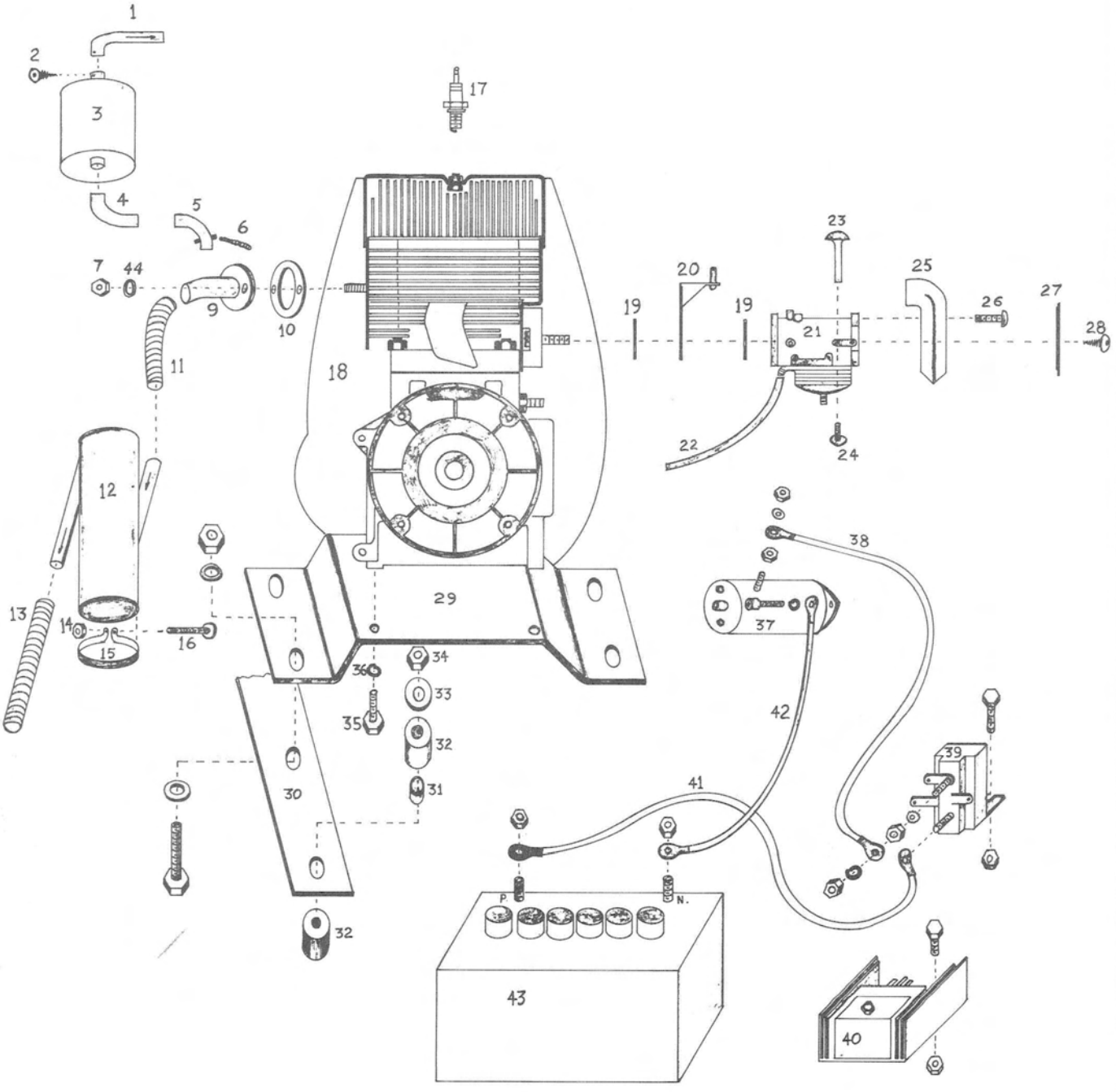

No. illus.	NEW PART NO.		MOTEUR	ENGINE	MODEL	MK 1 292	MK 1 292 E	MK 1 338	MK 1 438	MK 1 438 E	MK 1 493	MK 1 493 E		MK 1 340	MK 1 340 E						
			DESCRIPTION																		
1	S-12-01-019		Tuyau sortie	Outlet tube				1						1	1						
2	S-00-07-005		Vis	Screw				1						1	1						
3	S-72-01-001		Silencieux	Muffler				1						1	1						
4	S-12-01-020		Tuyau d'échappement (muffler)	Exhaust pipe				1													
-	S-12-01-021		" " "	" "				1							1						
5	S-12-01-023		" " (motor)	" "				1													
-	S-12-01-024		" " "	" "										1	1						
6	S-12-01-026		Ressort	Spring				2						2	2						
7	S-00-03-017		Ecrou	Nut		2	2		2	2	2	2		2	2						
9	S-08-01-038		Ailette refroidissement	Flange		1	1														
-	S-08-01-043		" "	"				1													
-	S-08-01-046		" "	"										1	1						
10	S-00-17-001		Point d'échappement	Gasket		1	1		2	2	2	2		2	2						
-	S-00-17-003		" "	"				1													
11	S-12-01-013		Tuyau d'échappement flexible	Exhaust pipe		1	1														
-	S-12-01-014		" " "	" "					1	1	1	1									
12	S-12-01-004		Silencieux 1 cylindre	Muffler 1 cyl.		1	1														
-	S-12-01-005		" 2 cylindres	" 2 cyl.					1	1	1	1									
-	S-72-01-001		" Donaldson	Muffler Donaldson				1						1	1						
13	S-12-01-016		Tuyau sortie flexible	Flex. tube outlet					1	1	1	1									
14	S-00-03-007		Ecrou	Nut		2	2	2	2	2	2	2		2	2						
15	S-12-01-017		Attache	Strapping		2	2		2	2	2	2									
-	S-12-01-018		"	"				2						2	2						
16	S-00-01-016		Boulon	Bolt		2	2	2	2	2	2	2		2	2						
17	S-00-13-019		Fusible 225	Spark plug 225																	
-	S-00-13-020		" 240	" " 240																	
-	S-00-13-021		" 280	" " 280																	
-	S-00-13-022		" 310	" " 310																	
18	S-00-91-001		Moteur 292 cc.	Engine 292 cc.		1															
-	S-00-91-002		" 292 cc E	" 292 cc. E			1														
-	S-00-91-003		" 338 cc	" 338 cc.				1													
-	S-00-90-001		" 340 cc	" 340 cc.										1							
-	S-00-90-002		" 340 E	" 340 E											1						
-	S-00-91-004		" 438 cc	" 438 cc.					1												
-	S-00-91-005		" 438 cc E	" 438 E						1											
-	S-00-91-006		" 493 cc	" 493 cc							1										
-	S-00-91-007		" 493 cc E	" 493 cc. E								1									
19	S-00-17-004		Joint d'étanchéité H.R.	Gasket H.R.		2	2							2	2						
-	S-00-17-005		" " H.D.	" H.D.				2	2	2	2	2									
20	S-08-01-004		Support cable gaz	Throttle cable support		1	1							1	1						
-	S-08-01-006		" " "	" " "				1	1	1	1	1									
21	S-00-18-001		Carburateur H.R.	Carburator H.R.		1	1							1	1						
-	S-00-18-002		" H.D.	" H.D.				1	1	1	1			1	1						
22	S-08-01-011		Ligne de succion	Suction ligne		1	1	1	1	1	1	1		1	1						
23	S-68-01-006		Levier d'étrangleur	Choke liver handle		1	1	1	1	1	1	1		1	1						
24	S-00-07-004		Boulon	Bolt		1	1	1	1	1	1	1		1	1						
25	S-68-01-004		Filtreur @ l'air H.R.	Air filter H.R.		1	1							1	1						
-	S-68-01-005		" " " H.D.	" " H.D.				1	1	1	1	1									
26	S-00-01-017		Boulon	Bolt		3	3							3	3						
-	S-00-01-023		"	"				3	3	3	3	3									
27	S-68-01-002		Couvert de filtreur	Filter cap				1	1	1	1	1									
-	S-68-01-003		" " "	" "		1	1							1	1						
28	S-00-07-003		Vis	Screw				1	1	1	1	1									
29	S-08-01-025		Base moteur	Engine base		1	1	1													
-	S-08-01-027		" "	" "					1	1	1	1									
-	S-08-01-028		" "	" "										1	1						
30	S-08-01-031		Lame base moteur	Engine mount leaf					1	1	1	1									
-	S-08-01-032		" " "	" " "		1	1	1													
-	S-08-01-033		" " "	" " "										1	1						
31	S-00-10-002		Coussinet nylon	Nylon bushing		4	4	4	4	4	4	4		4	4						
32	S-08-01-001		Amortisseur caoutchouc	Rubber chock		8	8	8	8	8	8	8		8	8						
33	S-00-01-011		Rondelle support	Washer support absorber		4	4	4	4	4	4	4		4	4						
34	S-00-03-005		Ecrou	Nut		4	4	4	4	4	4	4		4	4						
35	S-00-01-024		Boulon	Bolt		4	4	4	4	4	4	4									
-	S-00-01-025		"	"										4	4						
36	S-00-12-007		Rondelle sécurité	Lock washer		4	4	4	4	4	4	4									
-	S-00-12-008		" "	" "										4	4						
37	S-00-14-004		Démarreur	Electric starter			1			1		1			1						
38	S-00-13-010		Fil positif	Positive wire			1			1		1			1						
39	S-00-13-008		Solenoïd	Solenoid			1			1		1			1						
40	S-00-13-023		Redresseur fusible	Rectifier			1			1		1			1						
41	S-00-13-009		Fil batterie positif	Positive battery wire			1			1		1				1					
42	S-00-13-011		" " négatif	Negative " "			1			1		1			1						
43	S-00-13-012		Batterie	Battery			1			1		1			1						
44	S-00-12-010		Rondelle de sécurité	Lock Washer		2	2		2	2	2	2		2	2						

MOTEUR. ENGINE.

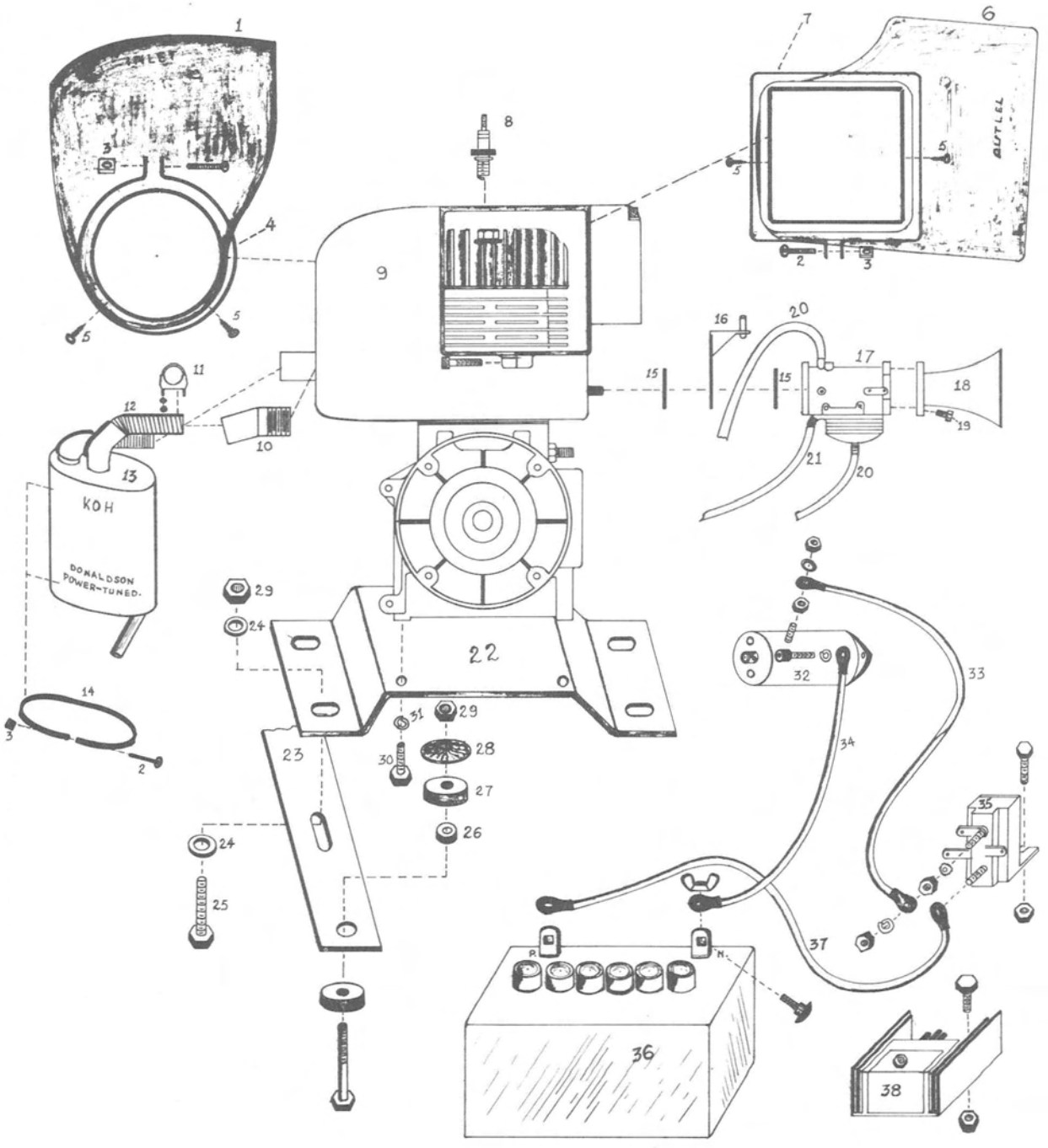

No. illus.	NEW PART NO		MOTEUR	ENGINE	MODEL	MK 11 R/T 340 J	MK 11 R/T 340 K	MK 11 R/T 340 EK	MK 11 R/T 440 K	MK 11 R/T 440 EK	MK 11 R/T 440 J			MK 11 W/T 340 K	MK 11 W/T 440 K	MK 11 W/T 440 EK				
			DESCRIPTION																	
1	S-68-02-003		Conduit d'air	Air duct		1					1									
-	S-68-02-001		" "	" "			1	1						1						
-	S-68-02-002		" "	" "					1	1					1	1				
2	S-00-01-017		Boulon	Bolt		1	2	2	2	2	1			2	2	2				
3	S-00-03-007		Ecrou	Nut		1	2	2	2	2	1			2	2	2				
4	S-08-02-004		Collet	Clamp			1	1	1	1				1	1	1				
5	S-00-02-009		Rivet	Rivet		4	4	4	4	4	4			4	4	4				
6	S-68-02-004		Conduit d'air	Air duct		1					1									
-	S-68-02-005		" "	" "			1	1						1						
-	S-68-02-006		" "	" "					1	1					1	1				
7	S-08-02-005		Collet	Clamp			1	1	1	1				1	1	1				
8	S-00-13-051		Fusible 260 T-Z	Spark Plug 260 T-Z					2	2	2			2	2	2				
9	S-00-92-006		Moteur	Engine		1														
-	S-00-95-001		"	"			1							1						
-	S-00-95-002		"	"				1												
-	S-00-95-003		"	"					1						1					
-	S-00-95-004		"	"						1						1				
-	S-00-92-007		"	"							1									
10	S-12-02-002		Entrée	Inlet			1	1	1	1				1	1	1				
11	S-00-19-021		"U" clamp	Muffler clamp		2	2	2	2	2	2			2	2	2				
12	S-12-02-003		Tuyau flex	Flex tubing			2	2	2	2				2	2	2				
13	S-72-02-001		Silencieux	Muffler		1					1									
-	S-12-02-001		"	"			1	1	1	1				1	1	1				
14	S-12-01-018		Attache silencieux	Strapping		1	2	2	2	2	1			2	2	2				
15	S-00-95-005		Joint d'étanchéité	Gasket		2	1	1	1	1	2			1	1	1				
16	S-08-01-006		Support cable à gaz	Throttle cable support		1					1									
17	S-00-18-004		Carburateur	Carburator		1					1									
-	S-00-18-005		"	"			1	1	1	1				1	1	1				
18	S-00-18-006		Flute	Ram		1	1	1	1	1	1			1	1	1				
19	S-00-01-018		Boulon	Bolt		3	3	3	3	3	3			3	3	3				
20	S-08-02-007		Entrée gaz	Gaz inlet		2	2	2	2	2	2			2	2	2				
21	S-08-01-011		Ligne succion	Vacuum line		1	1	1	1	1	1			1	1	1				
22	S-08-02-009		Base moteur	Engine Base			1	1						1						
-	S-08-02-010		" "	" "					1	1					1	1				
-	S-08-02-011		" "	" "		1					1									
23	S-08-02-012		Lame Base moteur	Engine mount leaf		1	1	1	1	1	1			1	1	1				
24	S-00-12-003		Rondelle	Flat washer		8	8	8	8	8	8			8	8	8				
25	S-00-01-012		Boulon	Bolt		4	4	4	4	4	4			4	4	4				
26	S-00-10-002		Coussinet nylon	Nylon bushing		4	4	4	4	4	4			4	4	4				
27	S-08-01-001		Amortisseur caout.	Rubber bushing		8	8	8	8	8	8			8	8	8				
28	S-04-01-011		Rondelle	Washer		4	4	4	4	4	4			4	4	4				
29	S-00-03-005		Ecrou	Nut		8	8	8	8	8	8			8	8	8				
30	S-00-01-040		Boulon	Bolt		4					4									
-	S-00-01-041		"	"			4	4	4	4				4	4	4				
31	S-00-12-008		Rondelle securité	Lock washer		4					4									
-	S-00-12-001		" "	" "			4	4	4	4				4	4	4				
32	S-00-14-006		Démarreur	Starter				1		1						1				
33	S-00-13-052		Fil positif 19"	Positive wire 19"				1		1						1				
34	S-00-13-053		Fil négatif batterie	Battery negative				1		1						1				
35	S-00-13-008		Solenoid	Solenoid				1		1						1				
36	S-00-13-012		Batterie	Battery				1		1						1				
37	S-00-13-054		Fil positif batterie	Battery positive wire				1		1						1				
38	S-00-13-023		Redresseur fusible	Rectifier				1		1						1				

CONVERTISSEUR.

EMBRAYAGE DE COMMANDE.

CONVERTER.

DRIVE CLUTCH.

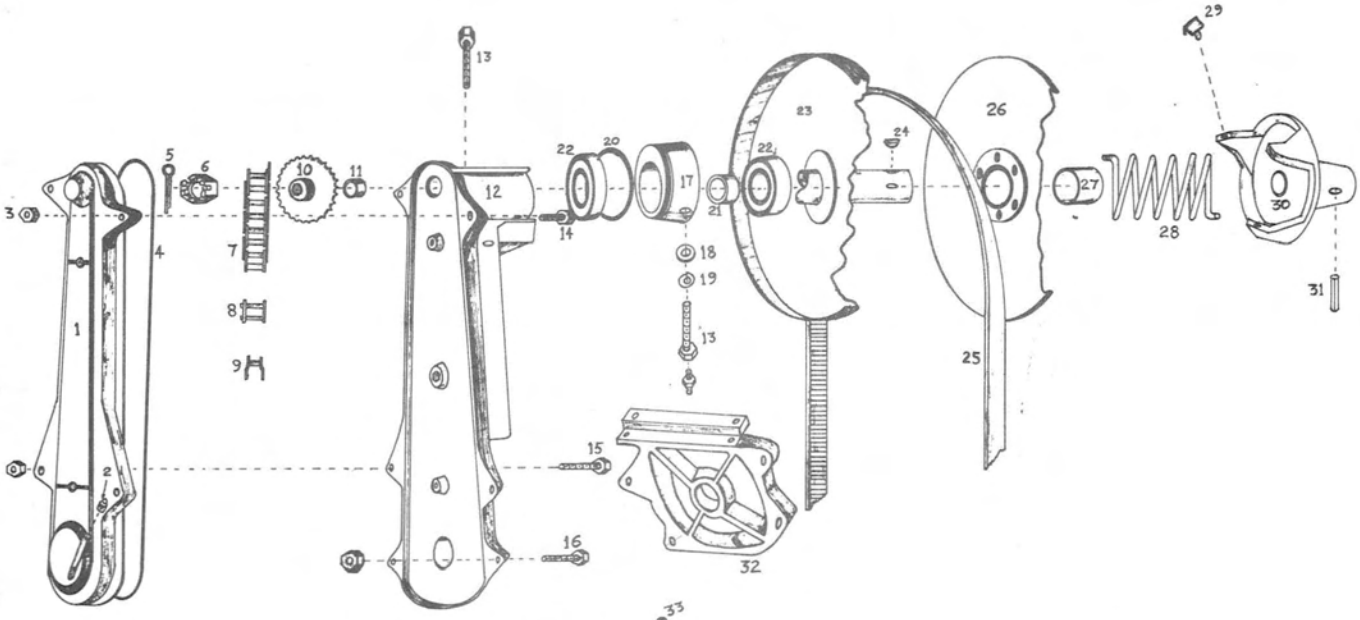

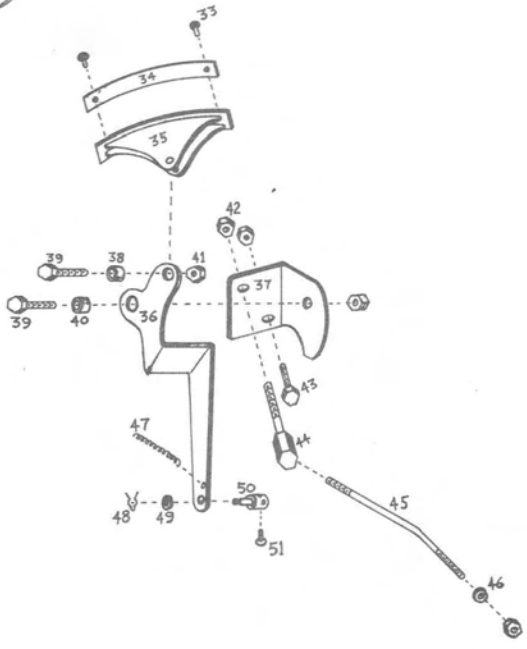

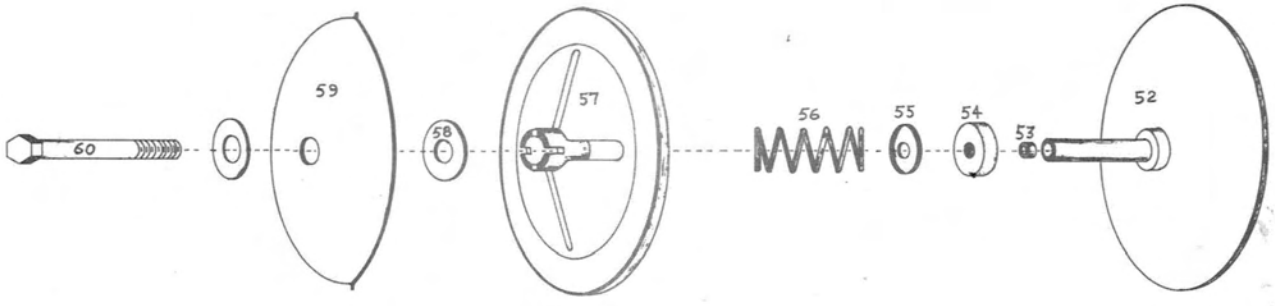

No. illus.	NEW PART NO.		CONVERTISSEUR & EMBRAYAGE DE COMMANDE	CONVERTER & DRIVE CLUTCH	MODEL	MK 1 292	MK 1 292 E	MK 1 338	MK 1 340	MK 1 340 E	MK 1 438	MK 1 438 E	MK 1 493	MK 1 493 E						
			DESCRIPTION																	
1	S-69-01-018		Couvert du boitier	Chain case cover		1	1	1	1	1	1	1	1	1						
2	S-00-19-012		Bouchon	Plug		1	1	1	1	1	1	1	1	1						
3	S-00-03-002		Ecrou	Nut		8	8	8	8	8	8	8	8	8						
4	S-69-01-019		Joint d'étanchéité	Chain case seal		1	1	1	1	1	1	1	1	1						
5	S-00-06-004		Goupille	Cotter pin		1	1	1	1	1	1	1	1	1						
6	S-00-03-013		Ecrou crênelé	Castelated nut		1	1	1	1	1	1	1	1	1						
7	S-69-01-031		Chaine RC-50, 10-21 dt	Chaine RC-50, 10-21 th																
-	S-69-01-008		Chaine RC-50, 10-23 dt	Chaine RC-50, 10-23 th		1	1													
-	S-69-01-032		Chaine RC-35-2, 18-36 dt	Chaine RC-35-2,18-36 th																
-	S-69-01-009		Chaine RC-35-2, 18-38 dt	Chaine RC-35-2, 18-38th				1	1	1	1	1	1	1						
8	S-00-16-001		Maille patente RC-50	Connecting link RC-50																
-	S-00-16-002		Maille patente RC-35-2	Connecting link RC-35-2																
9	S-00-16-003		Demi-maille RC-50	Offset link RC-50																
-	S-00-16-004		Demi-maille RC-35-2	Offset link RC-35-2																
10	S-69-01-010		Roue d'engrenage 10dt simple	Sproket 10 th simple		1	1													
-	S-69-01-014		Roue d'engrenage 17 dt double	Sproket 17 th double																
-	S-69-01-012		Roue d'engranage 18 dt double	Sproket 18 th double				1	1	1	1	1	1	1						
-	S-69-01-016		Roue d'engrenage 19 dt double	Sproket 19 th double																
-	S-69-01-025		Roue d'engrenage 20 dt double	Sproket 20 th double																
-	S-69-01-028		Roue d'engrenage 21 dt double	Sproket 21 th double																
-	S-69-01-029		Roue d'engrenage 22 dt double	Sproket 22 th double																
-	S-69-01-030		Roue d'engrenage 23 dt double	Sproket 23 th double																
11	S-09-01-039		Espaceur	Spacer		1	1	1	1	1	1	1	1	1						
12	S-69-01-017		Boitier de la chaine	Chain case		1	1	1	1	1	1	1	1	1						
13	S-00-01-004		Boulon	Bolt		2	2	2	2	2	2	2	2	2						
14	S-00-01-028		Boulon	Bolt		4	4	4	2	2	2	2	2	2						
15	S-00-01-027		Boulon	Bolt					2	2	2	2	2	2						
16	S-00-01-029		Boulon	Bolt		2	2	2												
-	S-00-01-008		Boulon	Bolt					2	2	2	2	2	2						
17	S-69-01-021		Palier convertisseur	Bearing hub		1	1	1	1	1	1	1	1	1						
18	S-14-01-030		Rondelle	Washer		1	1	1	1	1	1	1	1	1						
19	S-09-01-020		Rondelle	Flat washer		1	1	1	1	1	1	1	1	1						
20	S-69-01-022		Joint d'étanchéité	"O" ring		1	1	1	1	1	1	1	1	1						
21	S-09-01-018		Espaceur	Spacer		1	1	1	1	1	1	1	1	1						
22	S-00-08-003		Coussinet à bille	Ball bearing		2	2	2	2	2	2	2	2	2						
23	S-09-01-017		Arbre fixe ass	Converter shaft ass.		1	1	1	1	1	1	1	1	1						
24	S-00-19-011		Clé demi-lune	Woodruff key		1	1	1	1	1	1	1	1	1						
25	S-09-01-040		Courroie de commande	Drive belt		1	1	1	1	1	1	1	1	1						
26	S-09-01-038		Plaque mobile ass	Sliding plate ass.		1	1	1	1	1	1	1	1	1						
27	S-69-01-006		Coussinet de bronze	Oilite bushing		1	1	1	1	1	1	1	1	1						
28	S-69-01-002		Ressort à torsion	Torsion spring		1	1													
-	S-69-01-003		Ressort à torsion	Torsion spring				1	1	1	1	1	1	1						
29	S-69-01-005		Espaceur nylon	Nylon spacer		3	3	3	3	3	3	3	3	3						
30	S-69-01-007		Noyau à came	Converter cam		1	1	1	1	1	1	1	1	1						
31	S-00-06-001		Goupille	Roll pin		1	1	1	1	1	1	1	1	1						
-	S-09-01-036		Convertisseur ass	Converter ass.		1	1													
-	S-09-01-037		Convertisseur ass.	Converter ass.				1	1	1	1	1	1	1						
33	S-00-02-004		Rivet	Pop rivet		2	2	2	2	2	2	2	2	2						
34	S-06-01-007		Garniture du sabot	Brake lining		1	1	1	1	1	1	1	1	1						
35	S-06-01-005		Sabot	Brake shoe		1	1	1	1	1	1	1	1	1						
-	S-06-01-011		Sabot complet	Complet brake shoe		1	1	1	1	1	1	1	1	1						
36	S-06-01-004		Bras de frein	Brake arm		1	1	1	1	1	1	1	1	1						
37	S-06-01-003		Support du frein	Brake support		1	1	1	1	1	1	1	1	1						
38	S-06-01-010		Douille	Sleeve		1	1	1	1	1	1	1	1	1						
39	S-00-01-031		Boulon	Bolt		2	2	2	2	2	2	2	2	2						
40	S-06-01-009		Douille	Sleeve		1	1	1	1	1	1	1	1	1						
41	S-00-03-004		Ecrou	Nut		2	2	2	2	2	2	2	2	2						
42	S-00-03-002		Ecrou	Nut		2	2	2	2	2	2	2	2	2						
43	S-00-01-030		Boulon	Bolt		1	1	1	1	1	1	1	1	1						
44	S-74-01-001		Boulon d'ajustement	Adjusting bolt		1	1	1	1	1	1	1	1	1						
45	S-06-01-002		Tige	Rod		1	1	1	1	1	1	1	1	1						
46	S-00-12-002		Rondelle	Flat washer		1	1	1	1	1	1	1	1	1						
47	S-00-05-002		Ressort de tension	Tension spring		1	1	1	1	1	1	1	1	1						
48	S-00-19-013		Attache	Clip		1	1	1	1	1	1	1	1	1						
49	S-00-12-004		Rondelle	Flat washer		1	1	1	1	1	1	1	1	1						
50	S-06-01-001		Attache cable à frein	Brake cable lock		1	1	1	1	1	1	1	1	1						
51	S-00-07-004		Vis	Screw		1	1	1	1	1	1	1	1	1						
52	S-09-01-024		Arbre principal ass.	Main shaft ass.		1	1													
-	S-09-01-025		Arbre principal ass.	Main shaft ass.				1			1	1	1	1						
-	S-09-01-026		Arbre principal ass.	Main shaft ass.					1	1										
53	S-09-01-003		Douille	Sleeve		1	1	1	1	1	1	1	1	1						
54	S-00-10-003		Coussinet de bronze	Oilite bushing		1	1	1	1	1	1	1	1	1						
55	S-08-01-036		Retenu du ressort	Spring holder		1	1	1	1	1	1	1	1	1						
56	S-69-01-001		Ressort	Spring		1	1	1	1	1	1	1	1	1						
57	S-08-02-002		Plaque mobile ass.	Sliding plate ass.		1	1													
-	S-08-02-003		Plaque mobile ass.	Sliding plate ass.				1	1	1	1	1	1	1						
58	S-08-01-035		Rondelle	Washer		2	2	2	2	2	2	2	2	2						
59	S-09-01-030		Régulateur centrifuge ass	Centrifugal regulator		1	1	1	1	1	1	1	1	1						
60	S-00-01-026		Boulon	Bolt		1	1	1	1	1	1	1	1	1						
-	S-09-02-004		Embrayage ass.	Drive clutch ass.		1	1													
-	S-09-02-002		Embrayage ass.	Drive clutch ass.				1			1	1	1	1						
-	S-09-02-003		Embrayage ass.	Drive clutch ass.					1	1										

CONVERTISSEUR. — CONVERTER.

FREIN. — BRAKE.

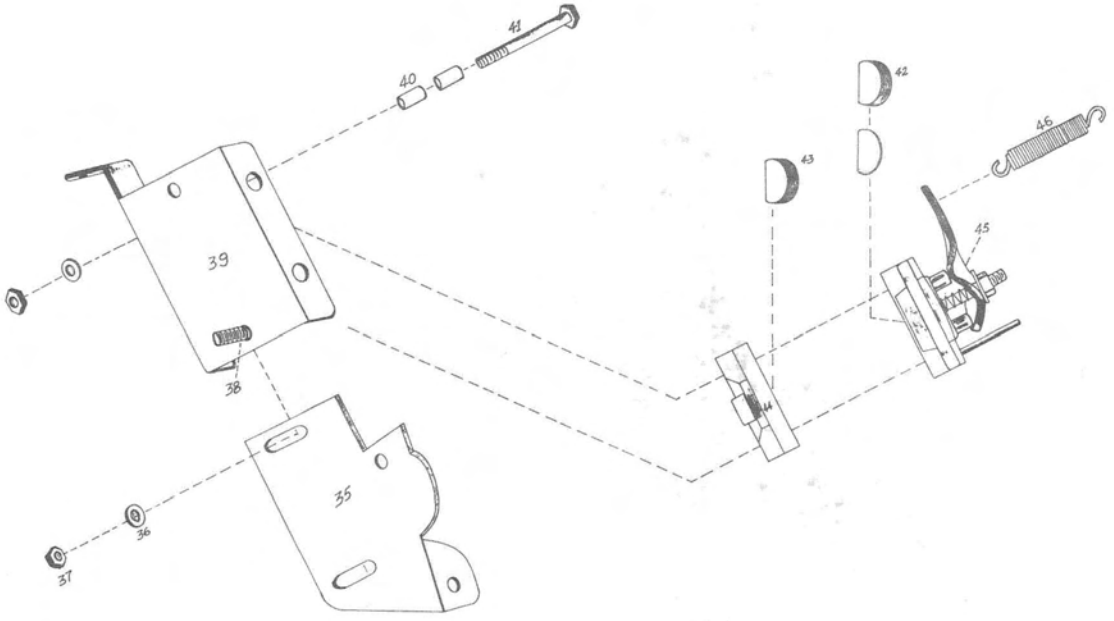

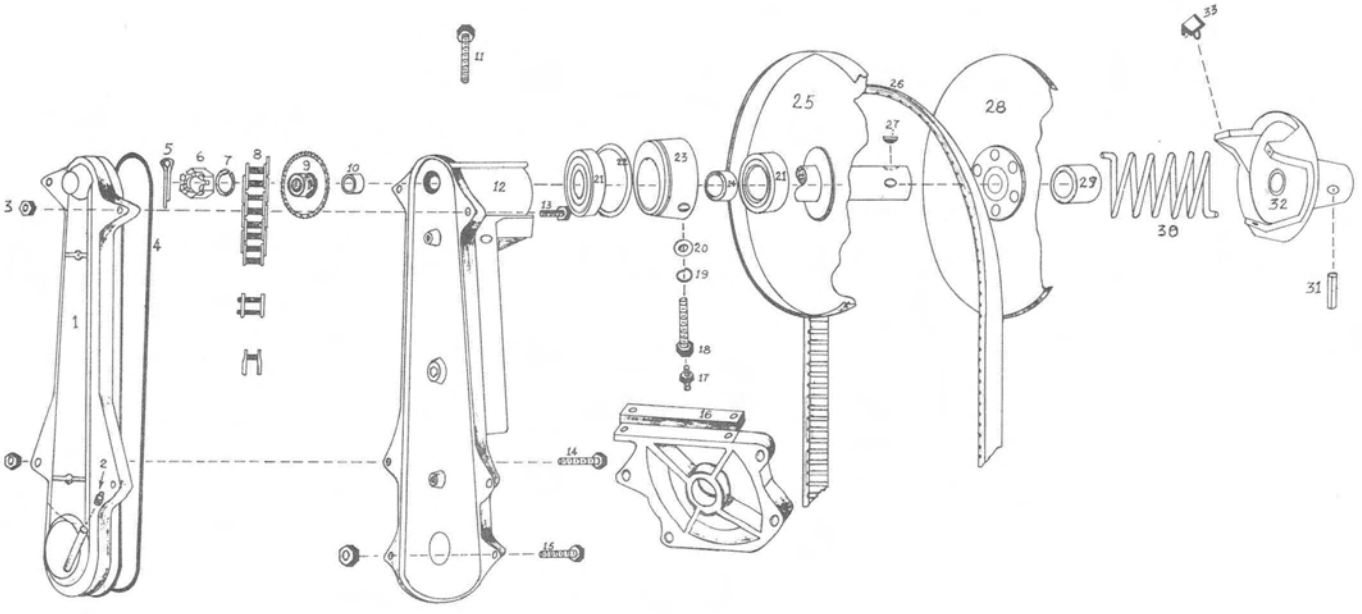

No. illus.	NEW PART NO.		CONVERTISSEUR FREIN	CONVERTER BRAKE	MOD	MK 11 R/T 340 J	MK 11 R/T 340 K	MK 11 R/T 340 EK	MK 11 R/T 440 K	MK 11 R/T 440 EK	MK 11 R/T 440 J			MK 11 W/T 340 K	MK 11 W/T 440 K	MK 11 W/T 440 EK				
			DESCRIPTION																	
1	S-69-01-018		Couvert du boitier	Chain Case cover		1	1	1	1	1	1			1	1	1				
2	S-00-19-012		Bouchon	Plug		1	1	1	1	1	1			1	1	1				
3	S-00-03-002		Ecrou	Nut		8	8	8	8	8	8			8	8	8				
4	S-69-01-o19		Joint d'étanchéité	Chain case seal		1	1	1	1	1	1			1	1	1				
5	S-00-06-004		Goupille	Cotter pin		1	1	1	1	1	1			1	1	1				
6	S-00-03-013		Ecrou crênele	Castelated nut		1	1	1	1	1	1			1	1	1				
7	S-00-12-012		Rondelle sécurité	Lock washer		1	1	1	1	1	1			1	1	1				
8	S-69-01-032		Chaine RC 35-2 18-36 dt	Chaine RC 35-2 18-36 TH																
-	S-69-01-009		" " 18-38 "	" " " 18-38 "																
-	S-00-16-002		Maille patente RC-35-2	Conn. Link RC-35-2																
-	S-00-16-004		Demi-maille RC-35-2	Off set link RC-35-2																
9	S-69-01-014		Roue d'engrenage 17 DT double	Sproket 17 TH double		1	1	1	1	1				1	1	1				
-	S-69-01-012		" 18 "	" 18 " "							1									
-	S-69-01-016		" 19 "	" 19 " "																
-	S-69-01-025		" 20 "	" 20 " "																
-	S-69-01-028		" 21 "	" 21 " "																
-	S-69-01-029		" 22 "	" 22 " "																
-	S-69-01-030		" 23 "	" 23 " "																
10	S-09-01-039		Espaceur	Spacer		1	1	1	1	1	1			1	1	1				
11	S-00-01-004		Boulon	Bolt		2	2	2	2	2	2			2	2	2				
12	S-69-01-017		Boitier de la chaine	Chain case		1	1	1	1	1	1			1	1	1				
13	S-00-01-028		Boulon	Bolt		2	2	2	2	2	2			4	4	4				
14	S-00-01-027		Boulon	Bolt		2	2	2	2	2	2									
15	S-00-01-029		"	"										2	2	2				
-	S-00-01-008		"	"		2	2	2	2	2	2									
16	S-69-01-020		Espaceur boitier	Chain case spacer		1	1	1	1	1	1									
17	S-00-04-002		Alomêtre	Zut		1	1	1	1	1	1			1	1	1				
18	S-09-01-059		Boulon	Bolt		1	1	1	1	1	1			1	1	1				
19	S-00-12-001		Rondelle sécurité	Lock washer		1	1	1	1	1	1			1	1	1				
20	S-09-01-020		Rondelle	Washer		1	1	1	1	1	1			1	1	1				
21	S-00-08-003		Coussinet à bille	Ball Bearing		2	2	2	2	2	2			2	2	2				
22	S-69-01-022		Joint d'étanchéité	"O" ring		1	1	1	1	1	1			1	1	1				
23	S-69-01-021		Palier convertisseur	Bearing Hub		1	1	1	1	1	1			1	1	1				
24	S-09-01-018		Espaceur	Spacer		1	1	1	1	1	1			1	1	1				
25	S-09-01-017		Arbre fixe ass.	Converter shaft ass.		1	1	1	1	1	1			1	1	1				
26	S-09-01-040		Courroie commande	Drive belt		1	1	1	1	1	1			1	1	1				
27	S-00-19-011		Clé demi-lune	Woodruff key		1	1	1	1	1	1			1	1	1				
28	S-09-01-038		Plaque mobile ass.	Sliding plate ass		1	1	1	1	1	1			1	1	1				
29	S-69-01-006		Coussinet de bronze	Oilite bushing		1	1	1	1	1	1			1	1	1				
30	S-69-01-003		Ressort à torsion	Torsion spring		1	1	1	1	1	1			1	1	1				
31	S-00-06-001		Goupille	Roll pin		1	1	1	1	1	1			1	1	1				
32	S-69-01-007		Noyeau à came	Converter cam		1	1	1	1	1	1			1	1	1				
33	S-69-01-005		Espaceur nylon	Nylon spacer		3	3	3	3	3	3			3	3	3				
-	S-09-01-037		Convertisseur ass	Converter ass		1	1	1	1	1	1			1	1	1				
35	S-06-02-003		Attache frein	Brake holder		1	1	1	1	1	1			1	1	1				
36	S-00-12-002		Rondelle	Washer		2	2	2	2	2	2			2	2	2				
37	S-00-03-002		Ecrou	Nut		4	4	4	4	4	4			4	4	4				
38	S-00-01-007		Boulon	Bolt		2	2	2	2	2	2			2	2	2				
39	S-06-02-004		Support frein	Brake support		1	1	1	1	1	1			1	1	1				
40	S-06-02-002		Douille	Sleeve		4	4	4	4	4	4			4	4	4				
41	S-00-01-039		Boulon	Bolt		2	2	2	2	2	2			2	2	2				
42	S-66-02-002		Garniture frein	Brake lining		1	1	1	1	1	1			1	1	1				
43	S-66-02-003		" "	" "		1	1	1	1	1	1			1	1	1				
44	S-66-02-004		Support intérieur	Int. support		1	1	1	1	1	1			1	1	1				
45	S-66-02-005		" extérieur	ext. support		1	1	1	1	1	1			1	1	1				
46	S-00-05-002		Ressort	Spring		1	1	1	1	1	1			1	1	1				
-	S-66-02-001		Frein complet	Complet brake		1	1	1	1	1	1			1	1	1				

CONDUITE. STEERING.

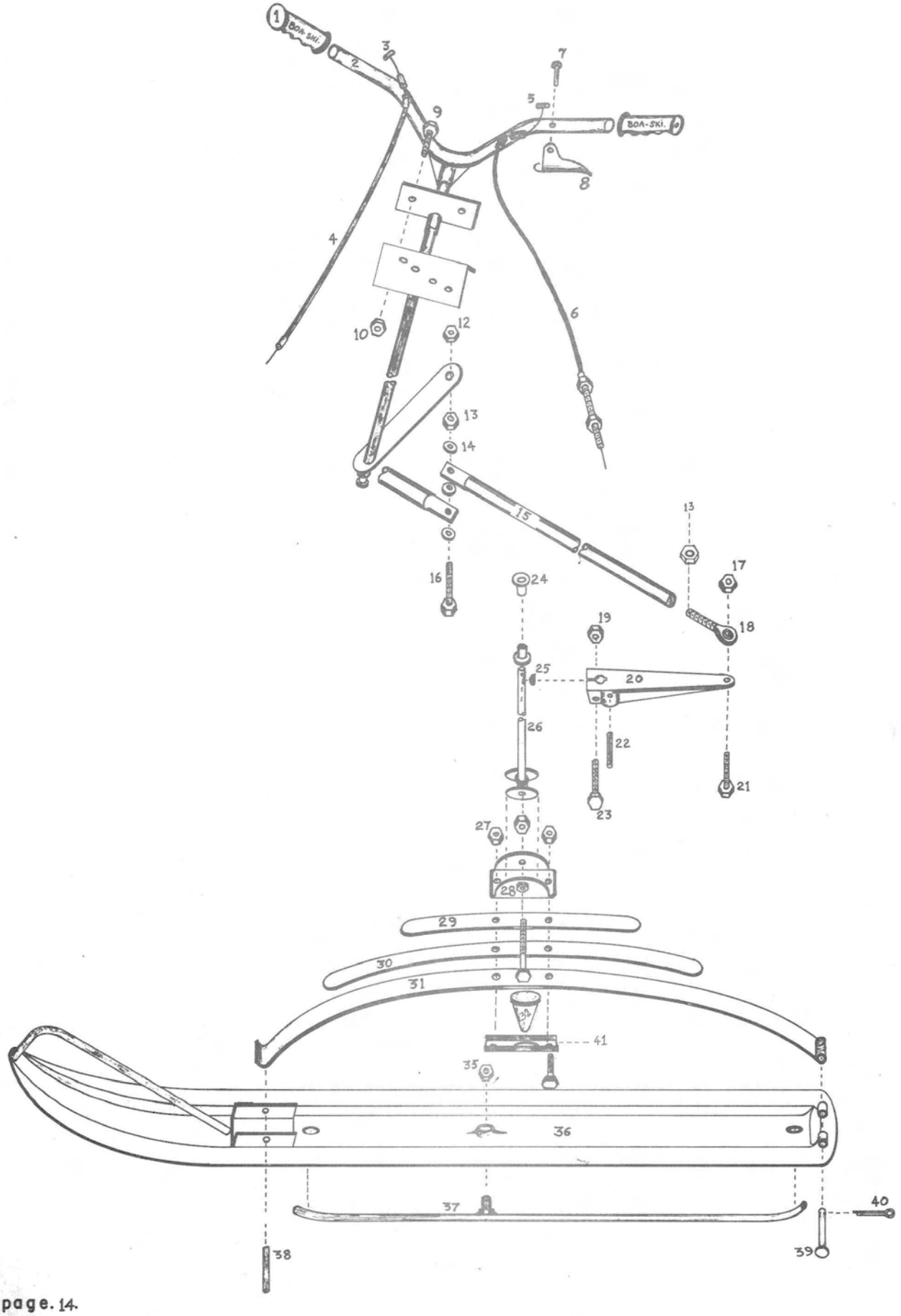

No. illus.	NEW PART NO.		CONDUITE	STEERING	MODEL	MK 1 292	MK 1 292 E	MK 1 338	MK 1 340	MK 1 340 E	MK 1 438	MK 1 438 E	MK 1 493	MK 1 493 E
			DESCRIPTION											
1	S-67-01-005		Poignée	Handle		2	2	2	2	2	2	2	2	2
2	S-07-01-012		Guidon	Handle bar		1	1	1	1	1	1	1	1	1
3	S-67-01-006		Cable à gaz	Gaz cable		1	1	1	1	1	1	1	1	1
4	S-67-01-007		Enveloppe	Gaz cable housing		1	1	1	1	1	1	1	1	1
-	S-67-01-001		Cable à gaz complet	Gaz cable ass		1	1	1	1	1	1	1	1	1
5	S-67-01-008		Cable à frein	Brake cable		1	1	1	1	1	1	1	1	1
6	S-67-01-009		Enveloppe	Brake cable housing		1	1	1	1	1	1	1	1	1
-	S-67-01-002		Cable à frein complet	Brake cable ass.		1	1	1	1	1	1	1	1	1
7	S-00-02-003		Rivet	Tubular rivet		2	2	2	2	2	2	2	2	2
8	S-07-01-001		Clanchette	Lever		2	2	2	2	2	2	2	2	2
9	S-00-01-010		Boulon	Bolt		2	4	2	2	4	2	4	2	4
-	S-00-01-020		Boulon	Bolt			2			2		2		2
10	S-00-03-004		Noix	Nut		2	6	2	2	6	2	6	2	2
11	S-01-01-106		Support (equip.elec.)	Support			1			1		1		1
12	S-00-03-005		Noix	Nut		1	1	1	1	1	1	1	1	1
13	S-00-03-012		Noix de blocage	Jam nut		1	1	1	1	1	1	1	1	1
14	S-00-12-006		Rondelle	Spring washer		3	3	3	3	3	3	3	3	3
15	S-07-01-015		Joint d'accou plement	Tie rod		2	2	2	2	2	2	2	2	2
16	S-00-01-021		Boulon	Hex bolt		1	1	1	1	1	1	1	1	1
17	S-00-03-005		Noix	Nut		2	2	2	2	2	2	2	2	2
18	S-00-19-010		Joint pivot	Tie rod end		2	2	2	2	2	2	2	2	2
19	S-00-03-002		Noix	Nut		2	2	2	2	2	2	2	2	2
20	S-07-01-009		Bras de conduite	Steering arm		2	2	2	2	2	2	2	2	2
21	S-00-01-012		Boulon	Bolt		2	2	2	2	2	2	2	2	2
22	S-00-06-003		Goupille	Roll pin		2	2	2	2	2	2	2	2	2
23	S-00-01-022		Boulon	Hex bolt		2	2	2	2	2	2	2	2	2
24	S-00-10-001		Cous inet bronze	Oilite bushing		4	4	4	4	4	4	4	4	4
25	S-00-10-011		Clé demi-lune	Woodruff key		2	2	2	2	2	2	2	2	2
26	S-07-01-011		Jambe de conduite gauche	Ski leg L.H.		1	1	1	1	1	1	1	1	1
-	S-07-01-017		Jambe de conduite droite	Ski leg R.H.		1	1	1	1	1	1	1	1	1
27	S-00-03-005		Noix	Nut		6	6	6	6	6	6	6	6	6
28	S-02-01-002		Harnais ass	Spring coupler		2	2	2	2	2	2	2	2	2
29	S-62-01-003		Lame secondaire	Secondary leaf spring		2	2	2	2	2	2	2	2	2
30	S-62-01-002		Lame intermédiaire	Helper leaf spring				2	2	2	2	2	2	2
31	S-62-01-001		Lame principale	Main leaf spring		2	2	2	2	2	2	2	2	2
32	S-02-02-003		Amortisseur	Shock absorber		2	2	2	2	2	2	2	2	2
33	S-00-01-013		Boulon	Bolt		2	2	2	2	2	2	2	2	2
34	S-00-01-012		Boulon	Bolt		2	2	2	2	2	2	2	2	2
35	S-00-03-008		Noix	Nut		2	2	2	2	2	2	2	2	2
36	S-02-02-005		Patin	Ski		2	2	2	2	2	2	2	2	2
37	S-02-02-006		Lame d'usure	Ski runner		2	2	2	2	2	2	2	2	2
38	S-02-01-010		Tige	Rod		2	2	2	2	2	2	2	2	2
39	S-62-01-004		Goupille de raccord	Hinge pin		2	2	2	2	2	2	2	2	2
40	S-00-06-002		Goupille	Cotter pin		2	2	2	2	2	2	2	2	2
-	S-02-02-007		Patin complet	Ski ass		2	2	2	2	2	2	2	2	2
41	S-02-02-004		Plaque amortisseur	Shock absorber plate		2	2	2	2	2	2	2	2	2

CONDUITE. STEERING.

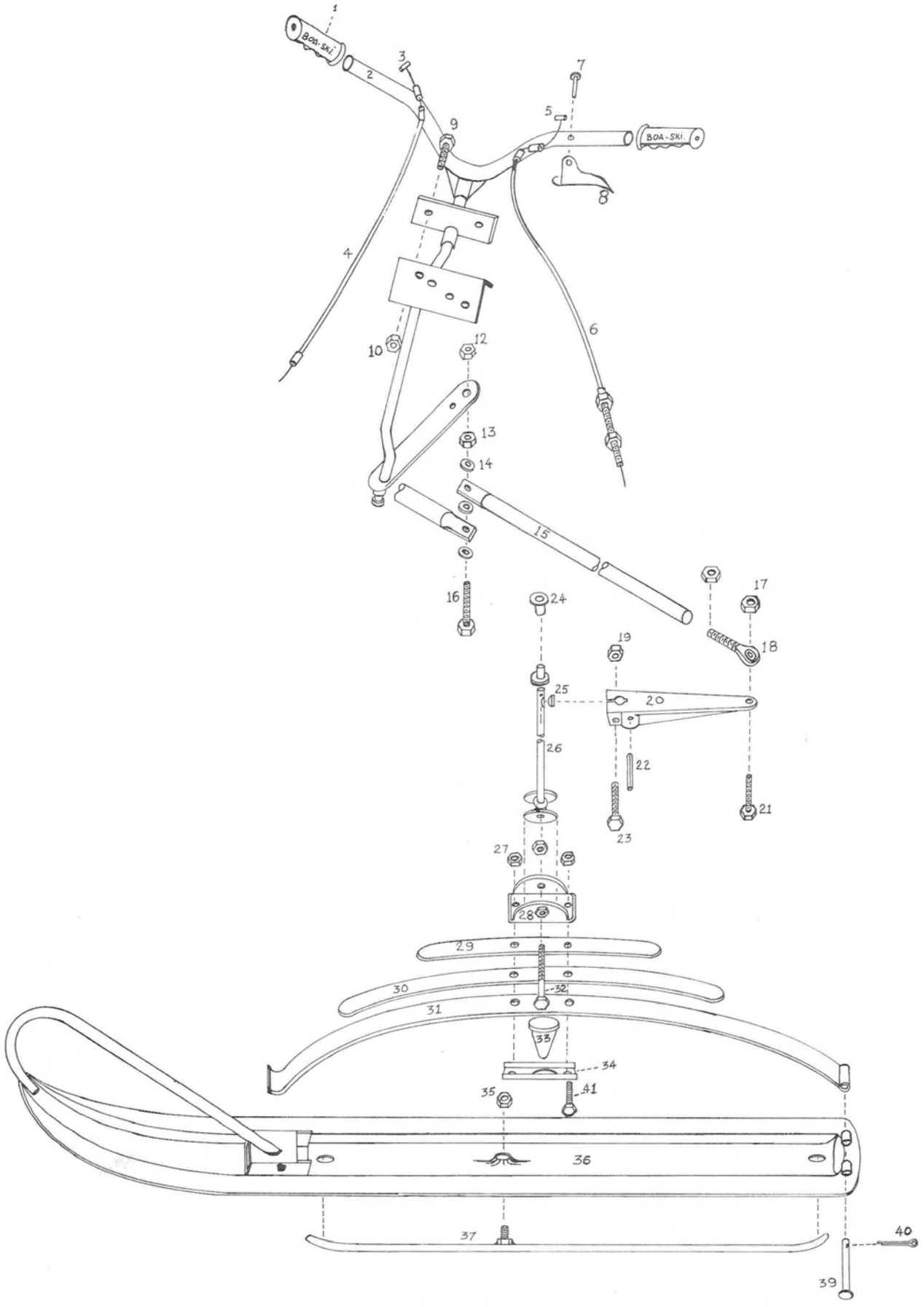

No. illus.	NEW PART NO.		CONDUITE	STEERING	MODEL. MK 11 R/T 340 J	MK 11 R/T 340 K	MK 11 R/T 340 EK	MK 11 R/T 440 K	MK 11 R/T 440 EK	MK 11 R/T 440 J			MK 11 W/T 340 K	MK 11 W/T 440 K	MK 11 W/T 440 EK				
			DESCRIPTION																
1	S-67-01-005		Poignée	Handle	2	2	2	2	2	2			2	2	2				
2	S-07-02-001		Guidon	Handle bar	1	1	1	1	1	1			1	1	1				
3	S-67-01-006		Cable à gaz	Gaz cable	1	1	1	1	1	1			1	1	1				
4	S-67-01-007		Enveloppe	Gaz câble Housing	1	1	1	1	1	1			1	1	1				
-	S-67-01-001		Cable à gaz ass	Gaz cable ass	1	1	1	1	1	1			1	1	1				
5	S-67-01-008		Cable à frein	Brake cable	1	1	1	1	1	1			1	1	1				
6	S-67-01-009		Enveloppe	Brake cable housing	1	1	1	1	1	1			1	1	1				
-	S-67-01-002		Cable à frein ass	Brake cable ass	1	1	1	1	1	1			1	1	1				
7	S-00-02-003		Rivet	Tibular rivet	2	2	2	2	2	2			2	2	2				
8	S-07-01-001		Clanchette	Lever	2	2	2	2	2	2			2	2	2				
9	S-00-01-010		Boulon	Bolt	2	2	4	2	4	2			2	2	4				
-	S-00-01-020		Boulon	Bolt			2		2						2				
10	S-00-03-004		Ecrou	Nut	2	2	6	2	6	2			2	2	6				
11	S-01-01-106		Support (équip. élec.)	Support (elec. start)			1		1						1				
12	S-00-03-005		Ecrou	Nut	1	1	1	1	1	1			1	1	1				
13	S-00-03-012		Ecrou blocage	Jam nut	1	1	1	1	1	1			1	1	1				
14	S-00-12-006		Rondelle	Spring washer	3	3	3	3	3	3			3	3	3				
15	S-07-01-015		Joint d'accouplement	Tie rod	2	2	2	2	2	2			2	2	2				
16	S-00-01-021		Boulon	Hex. bolt	1	1	1	1	1	1			1	1	1				
17	S-00-03-005		Ecrou	Nut	4	4	4	4	4	4			4	4	4				
18	S-00-19-010		Joint pivot	Tie rod end	2	2	2	2	2	2			2	2	2				
19	S-00-03-002		Ecrou	Nut	2	2	2	2	2	2			2	2	2				
20	S-07-01-009		Bras de conduite	Steering arm	2	2	2	2	2	2			2	2	2				
21	S-00-01-012		Boulon	Bolt	2	2	2	2	2	2			2	2	2				
22	S-00-06-003		Goupille	Roll pin	2	2	2	2	2	2			2	2	2				
23	S-00-01-022		Boulon	Hex. bolt	2	2	2	2	2	2			2	2	2				
24	S-00-10-001		Coussinet de bronze	Oilite busing	4	4	4	4	4	4			4	4	4				
25	S-00-19-011		Clé demi-lune	Woodruff key	2	2	2	2	2	2			2	2	2				
26	S-07-01-011		Jambe conduite gauche	ski leg lih.	1	1	1	1	1	1			1	1	1				
-	S-07-01-017		" " droite	" " R.H.	1	1	1	1	1	1			1	1	1				
27	S-00-03-005		Ecrou	Nut	6	6	6	6	6	6			6	6	6				
28	S-02-01-002		Harnais ass	Spring coupler	2	2	2	2	2	2			2	2	2				
29	S-62-01-003		Lame secondaire	Secondary leaf spring	2	2	2	2	2	2			2	2	2				
30	S-62-01-002		Lame intermédiaire	Helper leaf spring	2	2	2	2	2	2			2	2	2				
31	S-62-01-001		Lame principale	man leaf Spring	2	2	2	2	2	2			2	2	2				
32	S-00-01-013		Boulon	Hex. bolt	2	2	2	2	2	2			2	2	2				
33	S-02-02-003		Amortisseur	Shock absorber	2	2	2	2	2	2			2	2	2				
34	S-02-02-004		Plaque amortisseur	Shock absorber plate	2	2	2	2	2	2			2	2	2				
35	S-00-03-008		Ecrou	Nut	2	2	2	2	2	2			2	2	2				
36	S-02-02-005		Patin	Ski	2	2	2	2	2	2									
-	S-02-01-017		"	"									2	2	2				
37	S-02-02-006		Lame d'usure	Ski runner	2	2	2	2	2	2									
-	S-02-01-019		" "	" "									2	2	2				
38	S-02-01-010		Tige	Rod	2	2	2	2	2	2			2	2	2				
39	S-62-01-004		Goupille de raccord	Hinge pin	2	2	2	2	2	2			2	2	2				
40	S-00-06-002		Goupille	Cotter pin	2	2	2	2	2	2			2	2	2				
41	S-00-01-012		Boulon	Hex bolt	2	2	2	2	2	2			2	2	2				
-	S-02-02-007		Patin complet	Ski ass	2	2	2	2	2	2									
-	S-02-01-025		Patin complet	Ski ass									2	2	2				

ESSIEU AVANT. FRONT AXLE.

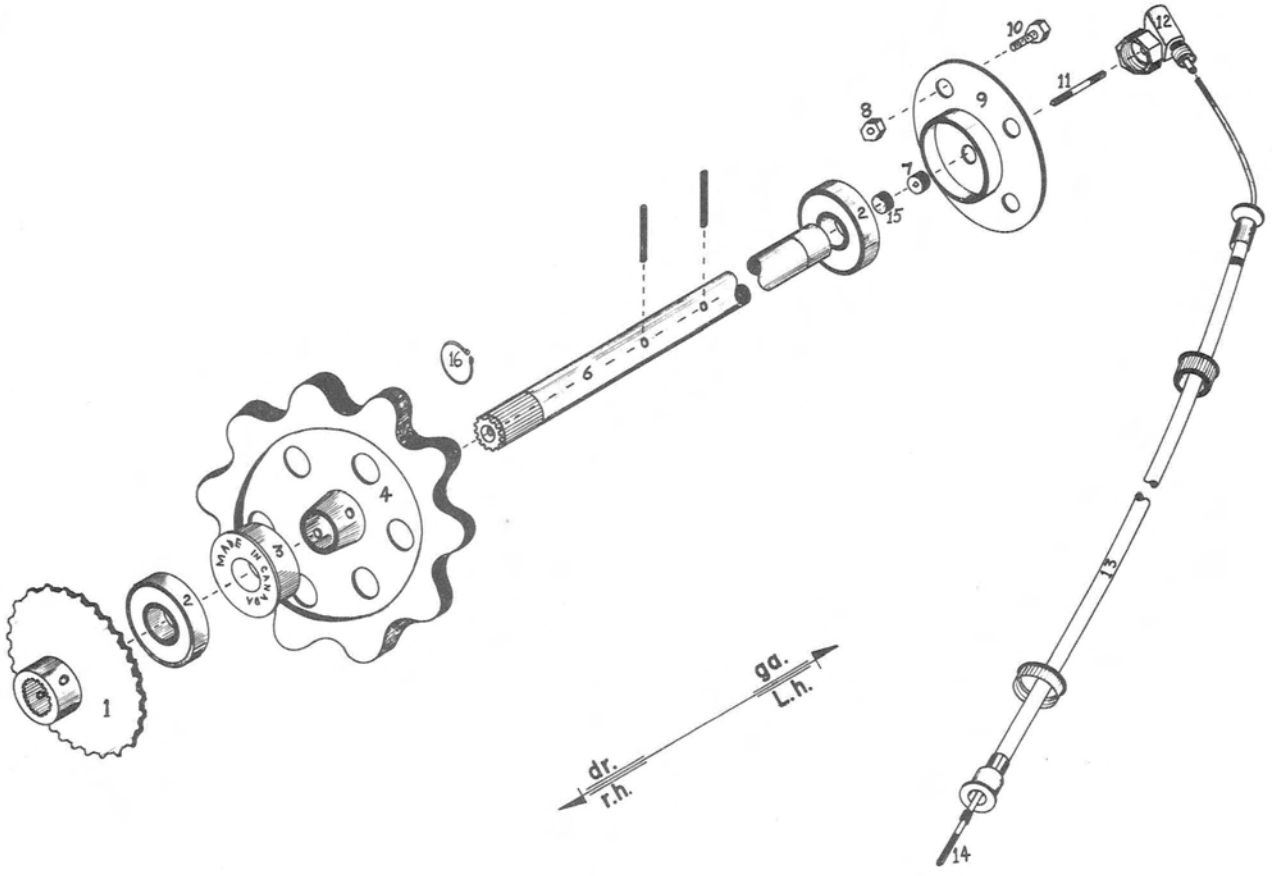

No. illus.	NEW PART NO.		ESSIEU AVANT	FRONT AXLE	MODEL	MK 1 292	MK 1 292 E	MK 1 338	MK 1 340	MK 1 340 E	MK 1 438	MK 1 438 E	MK 1 493	MK 1 493 E
			DESCRIPTION											
1	S-69-01-023		Roue d'engrenage 21 dt simple	Sproket 21 th simple										
-	S-69-01-024		Roue d'engrenage 22 dt simple	Sproket 22 th simple										
-	S-69-01-011		Roue d'engranage 23 dt simple	Sproket 23 th simple		1	1							
-	S-69-01-013		Roue d'engrenage 38 dt double	Sproket 38 th double				1	1	1	1	1		
-	S-69-01-015		Roue d'engrenage 36 dt double	Sproket 36 th double									1	1
-	S-69-01-026		Roue d'engrenage 35 dt double	Sproket 34 th double										
-	S-69-01-027		Roue d'engrenage 37 dt double	Sproket 37 th double										
2	S-00-08-002		Coussinet à bille	Ball bearing		2	2	2	2	2	2	2	2	2
3	S-04-01-019		Joint d'étanchéité	Grease seal		1	1	1	1	1	1	1	1	1
4	S-04-01-026		Engrenage plastic	Plastic Drive sproket		2	2	2	2	2	2	2	2	2
5	S-00-06-001		Goupille	Roll pin		4	4	4	4	4	4	4	4	4
6	S-04-02-003		Essieu	Shaft		1	1	1						
-	S-04-02-006		Essieu	Shaft					1	1	1	1	1	1
7	S-00-14-002		Adapteur	Speedo joint		1	1	1	1	1	1	1	1	1
8	S-00-03-004		Ecrou	Nut		4	4	4	4	4	4	4	4	4
9	S-04-01-010		Chapeau coussinet	Bearing housing										
-	S-04-01-008		Chapeau coussinet	Bearing housing		1	1	1	1	1	1	1	1	1
10	S-00-01-010		Boulon	Bolt		4	4	4	4	4	4	4	4	4
11	S-00-15-002		Cable adapteur	Adaptor cable		1	1	1	1	1	1	1	1	1
12	S-73-01-002		Rectificateur vitesse	Angle drive		1	1	1	1	1	1	1	1	1
13	S-73-01-033		Enveloppe cable vitesse	Housing cable		1	1	1	1	1	1	1	1	1
14	S-73-01-034		Cable vitesse	Cable		1	1	1	1	1	1	1	1	1
15	S-00-19-002		Bouchon liège	Plug		1	1	1	1	1	1	1	1	1
-	S-73-01-001		Cable vitesse complet	Speedo cable ass.		1	1	1	1	1	1	1	1	1
16	S-00-09-002		"Snap ring"	Snap ring		1	1	1	1	1	1	1	1	1

ESSIEU AVANT. FRONT AXLE.

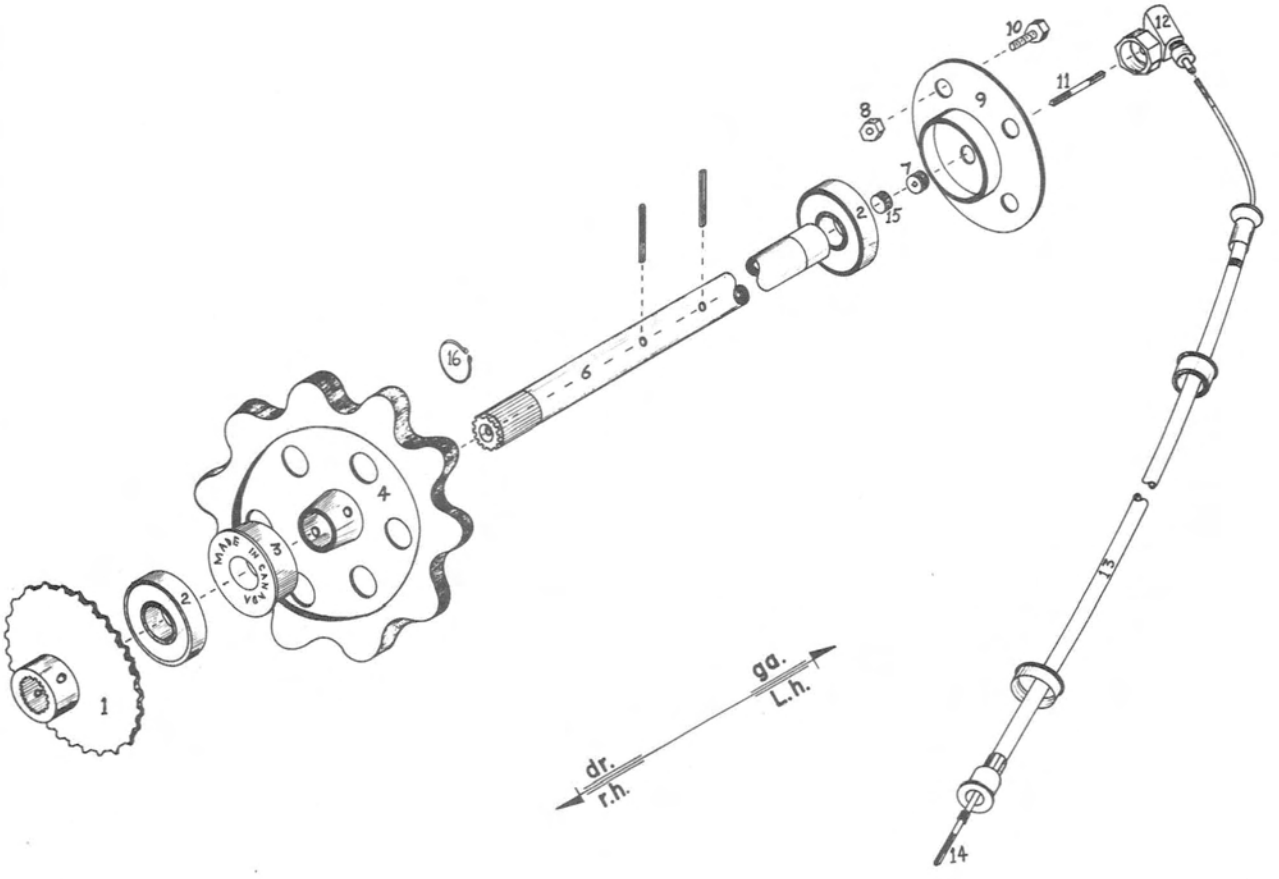

No. illus.	NEW PART NO.		ESSIEU AVANT / DESCRIPTION	FRONT AXLE	MOD	MK 11 R/T 340 J	MK 11 R/T 340 K	MK 11 R/T 340 EK	MK 11 R/T 440 K	MK 11 R/T 440 EK	MK 11 R/T 440 J			MK 11 W/T 340 K	MK 11 W/T 440 K	MK 11 W/T 440 EK				
1	S-69-01-013		Roue d'engrenage 38 DT double	Sproket 38 TH double																
-	S-69-01-015		" " 36 "	" 36 "		1	1	1	1	1	1			1	1	1				
-	S-69-01-026		" " 35 "	" 35 "																
-	S-69-01-027		" " 37 "	" 37 "																
2	S-00-08-002		Coussinet à bille	Ball bearing		2	2	2	2	2	2			2	2	2				
3	S-04-01-019		Joint d'étanchéité	Grease seal		1	1	1	1	1	1			1	1	1				
4	S-04-01-026		Engrenage plastique	Plastic drive sproket		2	2	2	2	2	2			2	2	2				
5	S-00-06-001		Goupille	Roll pin		4	4	4	4	4	4			4	4	4				
6	S-04-02-006		Essieu	Shaft		1	1	1	1	1	1									
-	S-04-02-005		Essieu	Shaft										1	1	1				
7	S-00-14-002		Adapteur	Speedo joint		1	1	1	1	1	1			1	1	1				
8	S-00-03-004		Ecrou	Nut		4	4	4	4	4	4			4	4	4				
9	S-04-01-008		Chapeau coussinet	Bearing housing		1	1	1	1	1	1			1	1	1				
10	S-00-01-010		Boulon	Bolt		4	4	4	4	4	4			4	4	4				
11	S-00-15-002		Cable adapteur	Adaptor cable		1	1	1	1	1	1									
12	S-73-01-002		Rectificateur vitesse	Angle drive		1	1	1	1	1	1									
13	S-73-01-033		Enveloppe cable vitesse	Housing cable		1	1	1	1	1	1									
-	S-73-02-015		" " "	" "										1	1	1				
14	S-73-01-034		Cable vitesse	Speedo cable		1	1	1	1	1	1									
-	S-73-02-016		" "	" "										1	1	1				
15	S-00-19-002		Bouchon liège	Plug		1	1	1	1	1	1			1	1	1				
16	S-00-09-002		"Snap ring"	"Snap ring"		1	1	1	1	1	1			1	1	1				
-	S-73-01-001		Cable vitesse complet	Speedo cable ass		1	1	1	1	1	1									
-	S-73-02-017		Cable vitesse complet	Speedo cable ass										1	1	1				

ESSIEU ARRIERE COMPLET. COMPLETE REAR AXLE.

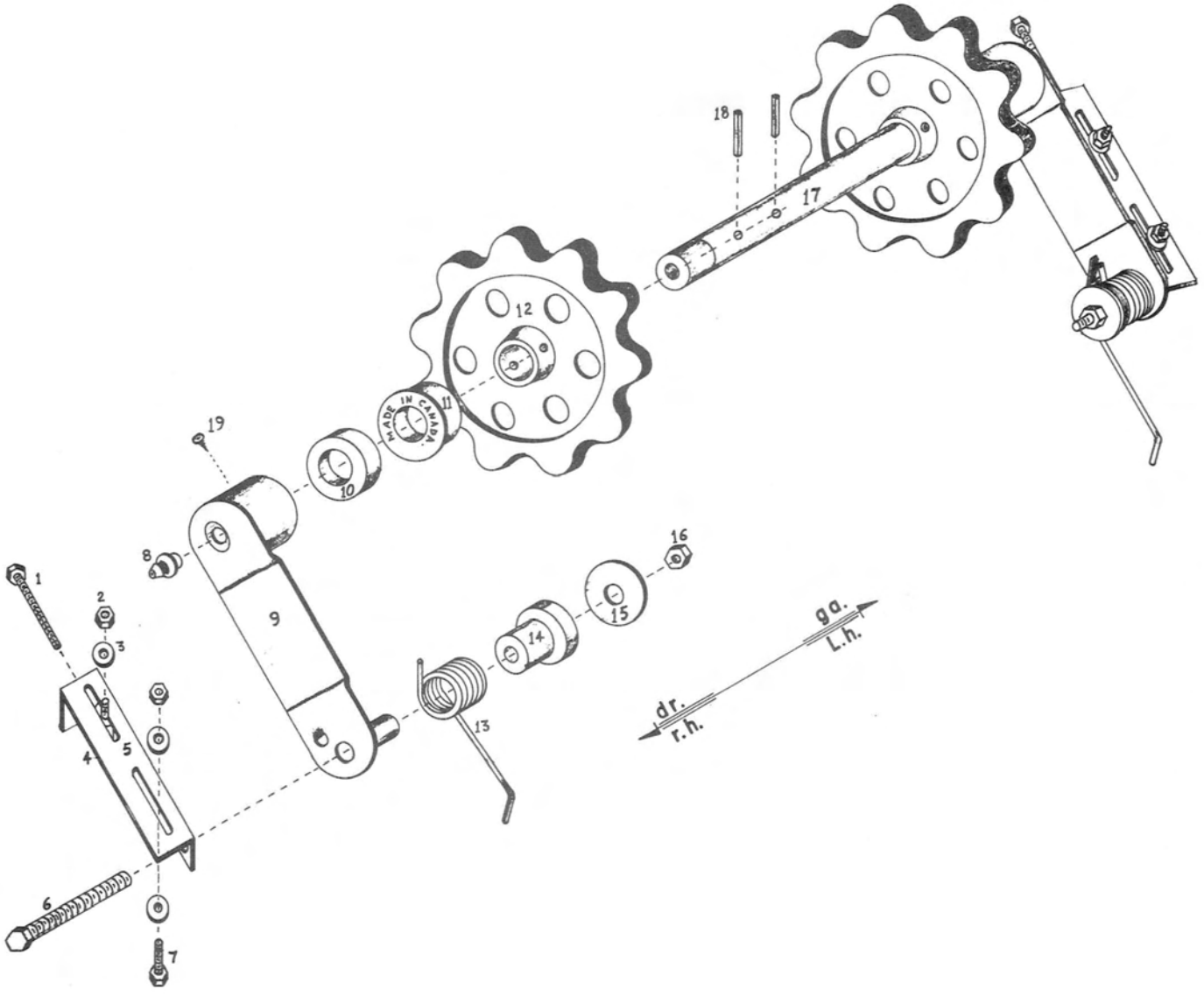

No. illus.	NEW PART NO,		ESSIEU ARRIERE	REAR AXLE	MODEL	MK 1 292	MK 1 292 E	MK 1 338	MK 1 340	MK 1 340 E	MK 1 438	MK 1 438 E	MK 1 493	MK 1 493 E
			DESCRIPTION											
1	S-00-01-008		Boulon	Bolt		2	2	2	2	2	2	2	2	2
2	S-00-03-002		Ecrou	Nut		4	4	4	4	4	4	4	4	4
3	S-00-12-002		Rondelle	Flat Washer		6	6	6	6	6	6	6	6	6
4	S-64-01-001		Boulon d'ajustement	Adjusting bolt		2	2	2	2	2	2	2	2	2
5	S-04-01-013		Angle d'ajustement droit	Adjusting angle R.H.		1	1	1	1	1	1	1	1	1
-	S-04-01-014		Angle d'ajustement gauche	Adjusting angle L.H.		1	1	1	1	1	1	1	1	1
6	S-00-01-009		Boulon	Bolt		2	2	2	2	2	2	2	2	2
7	S-00-01-007		Boulon	Bolt		2	2	2	2	2	2	2	2	2
8	S-00-04-001		Graisseur	Grease fitting		2	2	2	2	2	2	2	2	2
9	S-04-01-015		Plaque d'articulation droite	Link plate R.H.		1	1	1	1	1	1	1	1	1
-	S-04-01-016		Plaque d'articulation gauche	Link plate L.H.		1	1	1	1	1	1	1	1	1
10	S-00-08-001		Coussinet à bille	Ball bearing		2	2	2	2	2	2	2	2	2
11	S-04-01-019		Joint d'étanchéité	Grease seal		2	2	2	2	2	2	2	2	2
12	S-04-01-022		Engrenage caoutchouc	Rubber sproket		2	2	2	2	2	2	2	2	2
13	S-64-01-002		Ressort d'articulation droit	Link spring R.H.		1	1	1	1	1	1	1	1	1
-	S-64-01-003		Ressort d'articulation gauche	Link spring L.H.		1	1	1	1	1	1	1	1	1
14	S-04-01-012		Coussinet caoutchouc	Rubber bushing		2	2	2	2	2	2	2	2	2
15	S-04-01-011		Rondelle d'arrêt	Forming washer		2	2	2	2	2	2	2	2	2
16	S-00-03-003		Ecrou	Nut		2	2	2	2	2	2	2	2	2
17	S-04-01-004		Essieu	Shaft		1	1	1	1	1	1	1	1	1
-	S-04-01-005		Essieu	Shaft										
18	S-00-06-001		Goupille de tension	Roll pin		4	4	4	4	4	4	4	4	4
-	S-04-01-031		Essieu arrière complet	Rear axle complete		1	1	1	1	1	1	1	1	1

ESSIEU ARRIERE COMPLET.

COMPLETE REAR AXLE.

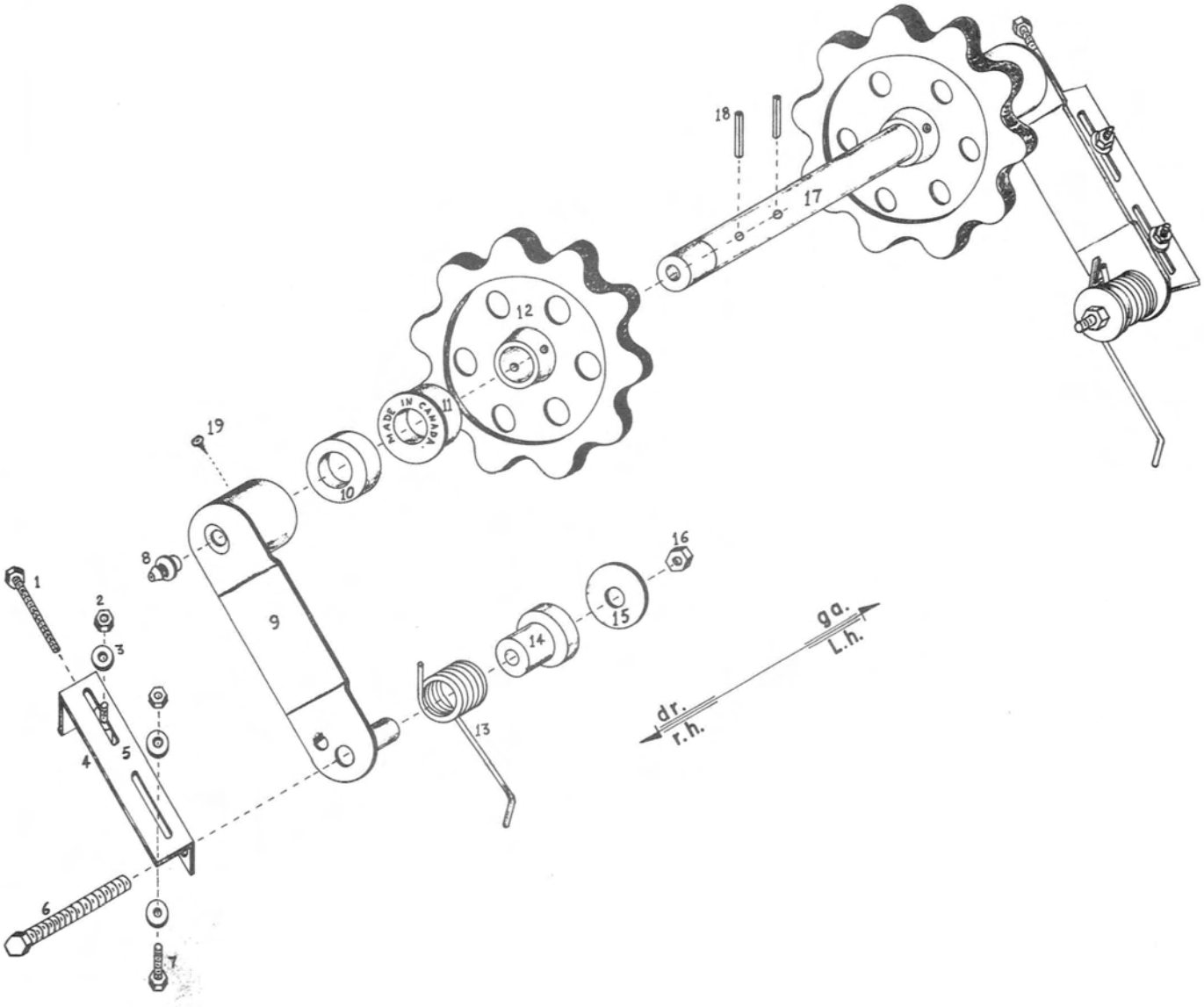

No. illus	NEW PART NO.		ESSIEU ARRIERE	REAR AXLE	MODEL MK 11 R/T 340 J	MK 11 R/T 340 K	MK 11 R/T 340 EK	MK 11 R/T 440 K	MK 11 R/T 440 EK	MK 11 R/T 440 J		MK 11 H/T 340 K	MK 11 H/T 440 K	MK 11 H/T 440 EK					
			DESCRIPTION																
1	S-00-01-008		Boulon	Bolt	2	2	2	2	2	2		2	2	2					
2	S-00-03-002		Ecrou	Nut	4	4	4	4	4	4		4	4	4					
3	S-00-12-002		Rondelle	Flat Washer	6	6	6	6	6	6		6	6	6					
4	S-64-01-001		Boulon d'ajustement	Adjusting bolt	2	2	2	2	2	2		2	2	2					
5	S-04-01-013		Angle d'ajustement droit	Adjusting angle R.H.	1	1	1	1	1	1		1	1	1					
-	S-04-01-014		Angle d'ajustement gauche	Adjusting angle L.H.	1	1	1	1	1	1		1	1	1					
6	S-00-01-009		Boulon	Bolt	2	2	2	2	2	2		2	2	2					
7	S-00-01-007		Boulon	Bolt	2	2	2	2	2	2		2	2	2					
8	S-00-04-001		Graisseur	Grease fitting	2	2	2	2	2	2		2	2	2					
9	S-04-01-015		Plaque d'articulation droite	Link plate R.H.	1	1	1	1	1	1		1	1	1					
-	S-04-01-016		Plaque d'articulation gauche	Link plate L.H.	1	1	1	1	1	1		1	1	1					
10	S-00-08-001		Coussinet à bille	Ball bearing	2	2	2	2	2	2		2	2	2					
11	S-04-01-019		Joint d'étanchéité	Grease seal	2	2	2	2	2	2		2	2	2					
12	S-04-01-022		Engrenage caoutchouc	Rubber sproket	2	2	2	2	2	2		2	2	2					
13	S-64-01-002		Ressort d'articulation droit	Link spring R.H.	1	1	1	1	1	1		1	1	1					
-	S-64-01-003		Ressort d'articulation gauche	Link spring L.H.	1	1	1	1	1	1		1	1	1					
14	S-04-01-012		Coussinet caoutchouc	Rubber bushing	2	2	2	2	2	2		2	2	2					
15	S-04-01-011		Rondelle d'arrêt	Forming washer	2	2	2	2	2	2		2	2	2					
16	S-00-03-003		Ecrou	Nut	2	2	2	2	2	2		2	2	2					
17	S-04-01-004		Essieu	Shaft	1	1	1	1	1	1									
-	S-04-01-005		Essieu	Shaft								1	1	1					
18	S-00-06-001		Goupille de tension	Roll pin	4	4	4	4	4	4		4	4	4					
-	S-04-01-031		Essieu arrière complet	Rear axle complete	1	1	1	1	1	1		1	1	1					

CHASSIS

BODY

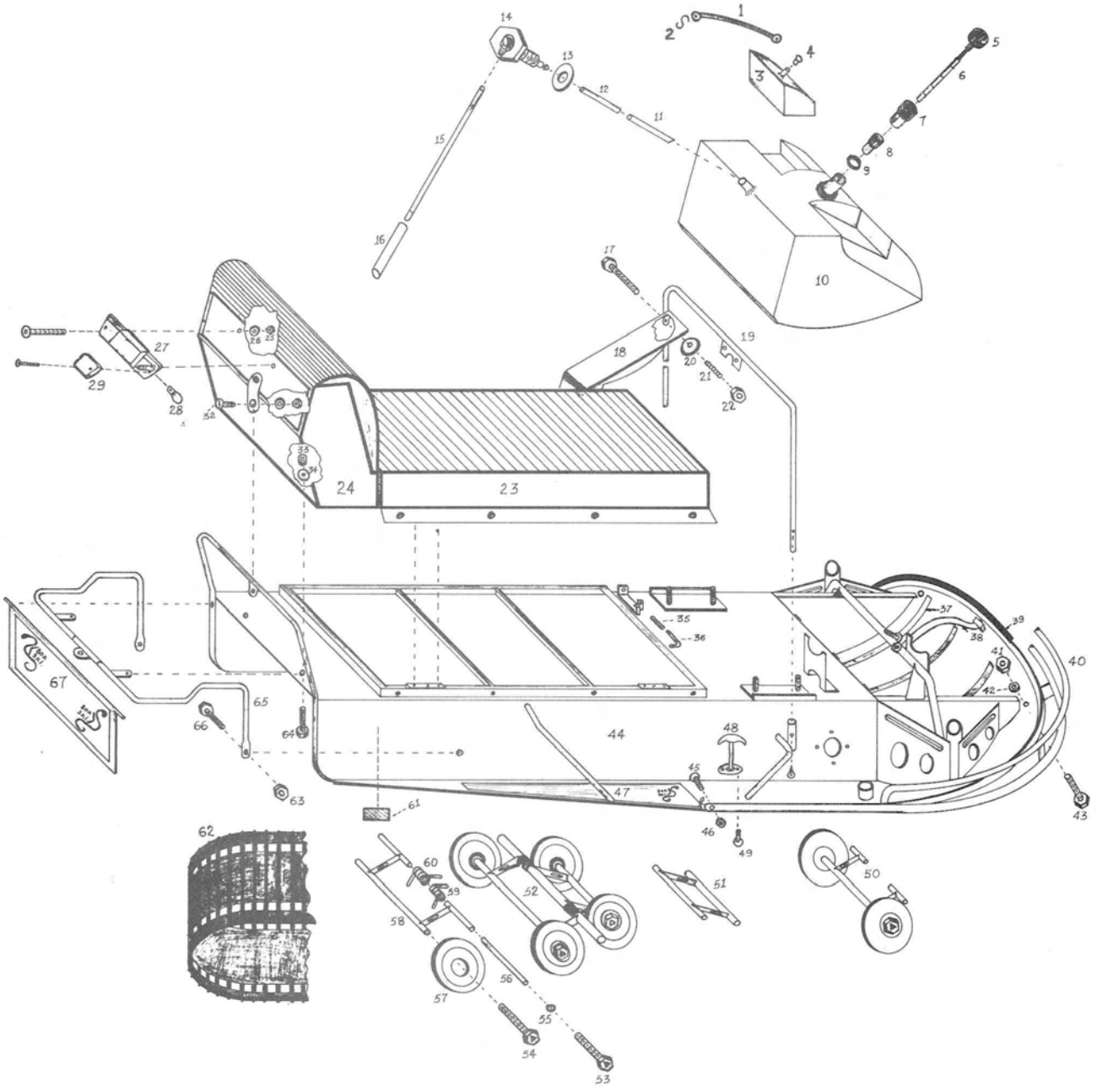

No. illus.		NEW PART NO.	CHASSIS	BODY	MODEL	MK 1 292	MK 1 292 L	MK 1 338	MK 1 340	MK 1 340 E	MK 1 438	MK 1 438 E	MK 1 493	MK 1 493 E
			DESCRIPTION											
1	S-01-01-089		Attache	Holder			1			1		1		1
2	S-14-01-030		Crochet	"S" Hook			1			1		1		1
3	S-70-01-005		Réservoir d'utilité	Utility tank			OPTIONNEL							
4	S-70-01-006		Bouchon	Fuel tank cap			OPTIONNEL							
5	S-70-02-002		Bouchon	Fuel tank cap		1	1	1		1	1	1	1	1
6	S-70-01-004		Jauge @ essence	Fuel Dip-stick		1	1	1		1	1	1	1	1
7	S-70-02-003		Tube plastique	Plastic tube		1	1	1		1	1	1	1	1
8	S-70-02-004		Tube d'alum.	Alum tube		1	1	1		1	1	1	1	1
9	S-19-00-025		Collet	Clamp		1	1	1		1	1	1	1	1
10	S-70-01-001		Réservoir @ essence	Fuel tank 4 gal.		1	1	1		1	1	1	1	1
11	S-10-01-003		Tube en cuivre	Cooper tubing										
12	S-10-01-002		Tube de vinyle	Vinyl tubing		1	1	1		1	1	1	1	1
13	S-00-19-007		Rondelle caoutchouc	Washer caoutchouc		1	1	1		1	1	1	1	1
14	S-00-15-001		Adapteur	Adoptor		1	1	1		1	1	1	1	1
15	S-14-01-031		Ligne @ essence	Fuel line		1	1	1		1	1	1	1	1
16	S-00-19-014		Isolateur	Insulation		1	1	1		1	1	1	1	1
17	S-00-01-017		Boulon	Bolt		1	1	1		1	1	1	1	1
18	S-01-01-108		Garde poulie	Clutch guard		1	1	1						
-	S-01-01-109		" "	" "						1	1	1	1	1
19	S-07-01-019		Support du volant	Handle Bar Yoke		1	1	1		1	1	1	1	1
20	S-01-01-110		Rondelle formée	Forming washer		1	1	1		1	1	1	1	1
21	S-00-05-001		Ressort	Spring		1	1	1		1	1	1	1	1
22	S-00-03-007		Ecrou	Nut		1	1	1		1	1	1	1	1
23	S-11-01-001		Siège assemblé	Seat ass.		1	1	1						
-	S-11-01-002		" "	" "						1	1	1	1	1
24	S-11-01-004		Dossier assemblé	Back rest ass.		1	1	1						
-	S-11-01-005		" "	" " "						1	1	1	1	1
25	S-00-03-009		Ecrou	Nut		2	2	2		2	2	2	2	2
26	S-00-12-004		Rondelle	Flat washer		2	2	2		2	2	2	2	2
27	S-71-01-001		Réceptacle	Tail light		1	1	1		1	1	1	1	1
28	S-00-13-016		Ampoule	Tail light bulb		2	2	2		2	2	2	2	2
29	S-71-01-002		Vitre lumière arr. ga.	Tail light lens L.H.		1	1	1		1	1	1	1	1
-	S-71-01-003		" " " droite	" " " R.H.		1	1	1		1	1	1	1	1
32	S-00-01-016		Boulon	Bolt		1	1	1		1	1	1	1	1
33	S-00-12-002		Rondelle	Flat washer		3	3	3		3	3	3	3	3
34	S-00-03-007		Ecrou	Nut		3	3	3		3	3	3	3	3
35	S-00-05-001		Ressort	Spring		1	1	1		1	1	1	1	1
36	S-01-01-105		Barrure	Lock (clutch guard)		1	1	1		1	1	1	1	1
37	S-99-22-001		Bande adhésive	Strip (Perma-strip)										
38	S-01-02-005		Attache réservoir	Fuel tank holder		1	1	1		1	1	1	1	1
39	S-01-01-017		Moulure "Jiffy"	Trim "Jiffy"		1	1	1		1	1	1	1	1
40	S-14-01-006		Pare-choc avant ass.	Front bumper ass.						1	1	1	1	1
-	S-14-01-018		" " " "	" " "		1	1	1						
41	S-00-03-002		Ecrou	Nut		2	2	2		2	2	2	2	2
42	S-14-01-030		Rondelle	Flat washer		2	2		2	2	2	2	2	2
43	S-00-01-007		Boulon	Bolt		2	2	2		2	2	2	2	2
44	S-01-01-016		Chassis	Body		1	1							
-	S-01-01-017		"	"				1						
-	S-01-01-018		"	"						1	1			
-	S-01-01-019		"	"								1	1	1
45	S-00-01-014		Boulon	Bolt		2	2	2		2	2	2	2	2
46	S-00-03-007		Ecrou	Nut		2	2	2		2	2	2	2	2
47	S-61-01-001		Marche-pied droit	Foot pad R.H.						1	1	1	1	1
-	S-61-01-002		" " gauche	" " L.H.						1	1	1	1	1
48	S-00-19-005		Attache cabine	Hood clamp		2	2	2		2	2	2	2	2
49	S-00-02-005		Rivet	Pop rivet		4	4	4		4	4	4	4	4
51	S-05-01-005		Support intérieur	Internal support		3	3		3	3	3	3	3	3
52	S-05-01-011		Suspension complète	Suspension ass.		3	3	3		3	3	3	3	3
53	S-00-01-005		Boulon	Bolt		6	6	6		6	6	6	6	6
54	S-00-01-006		"	"		12	12	12		12	12	12	12	12
55	S-00-12-001		Rondellessécurité	Lock washer		6	6	6		6	6	6	6	6
56	S-05-01-009		Arbre	Aluminium		3	3	3		3	3	3	3	3
57	S-00-19-001		Roue caoutchouc	Rubber wheel		12	12	12		12	12	12	12	12
58	S-05-01-008		Support extérieur	External support		3	3	3		3	3	3	3	3
59	S-65-01-011		Ressort droit	Suspension spring R.H.		3	3	3		3	3	3	3	3
60	S-65-01-002		" gauche	" " L.H.		3	3	3		3	3	3	3	3
61	S-01-02-023		Réflecteur (rouge)	Reflector		3	3	3		3	3	3	3	3
62	S-03-01-003		Chenille	Track		1	1	1		1	1	1	1	1
63	S-00-03-007		Ecrou	Nut		2	2	2		2	2	2	2	2
64	S-00-01-017		Boulon	Bolt		2	2	2		2	2	2	2	2
65	S-14-01-020		Pare-choc arrière	Rear bumper						1	1	1	1	1
66	S-00-01-018		Boulon	Bolt		2	2	2		2	2	2	2	2
67	S-01-01-099		Garde-neige	Snow flap						1	1	1	1	1

CHASSIS.

BODY.

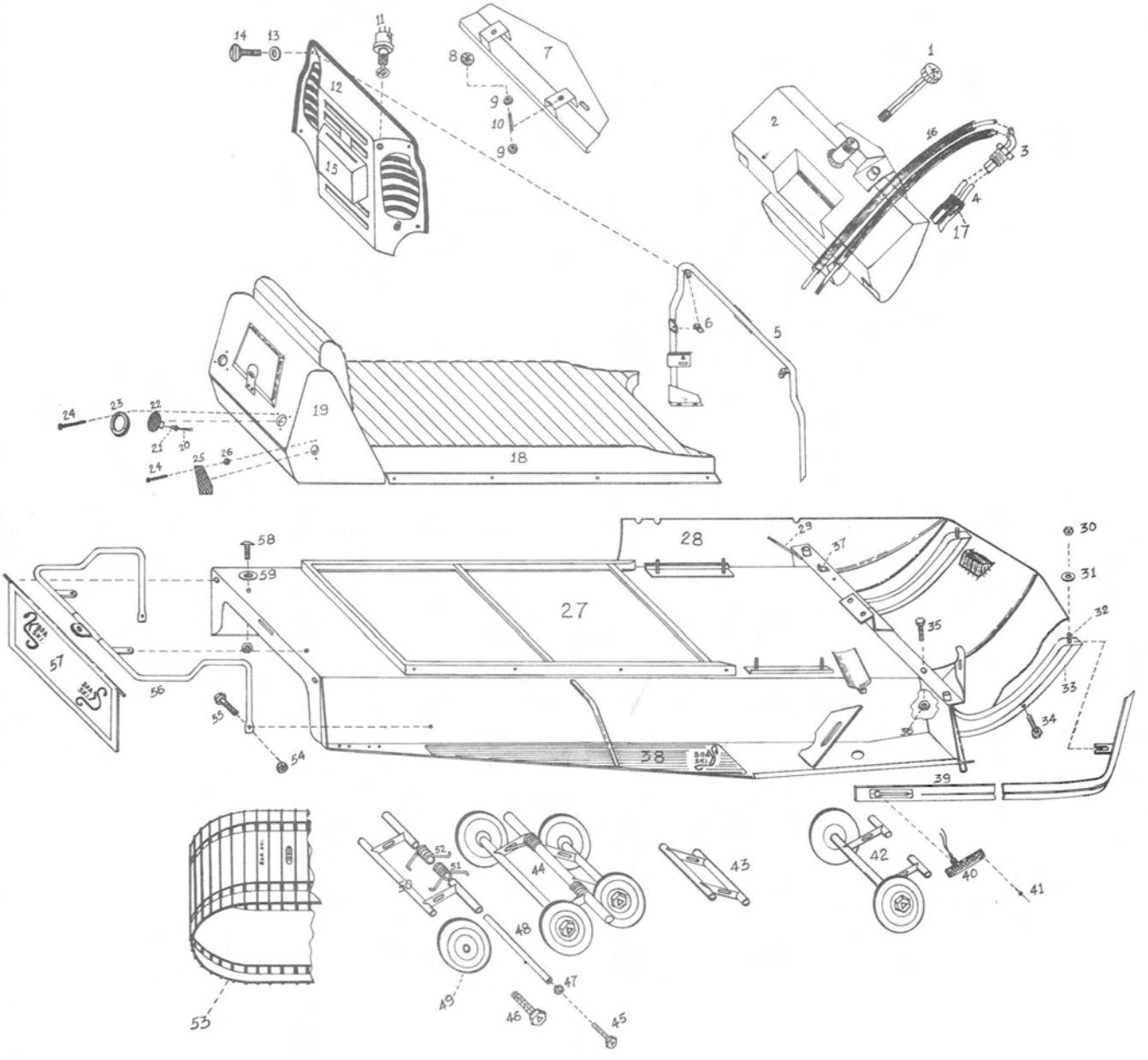

No. illus.	NEW PART NO.		CHASSIS	BODY	MODEL	MK 11 R/T 340 J	MK 11 R/T 340 K	MK 11 R/T 340 EX	MK 11 R/T 440 K	MK 11 R/T 440 EX	MK 11 R/T 440 J			MK 11 W/T 340 K	MK 11 W/T 440 K	MK 11 W/T 440 EX				
			DESCRIPTION																	
1	S-00-19-022		Bouchon à gaz	Fuel tank cap		1	1	1	1	1	1			1	1	1				
2	S-70-02-001		Réservoir à essence	Fuel tank		1	1	1	1	1	1			1	1	1				
3	S-00-19-023		Adapteur	Adaptor		1	1	1	1	1	1			1	1	1				
4	S-10-02-002		Tube vinyle	Vinyl tubing		2	2	2	2	2	2			2	2	2				
5	S-07-02-002		Support du volant	Handle bar yoke		1	1	1	1	1	1			1	1	1				
6	S-00-19-024		Attache	Speed clip		4	4	4	4	4	4			4	4	4				
7	S-10-02-001		Attache réservoir	Tank support		1	1	1	1	1	1			1	1	1				
8	S-01-02-017		Rondelle caout.	Rubber washer		2	2	2	2	2	2			2	2	2				
9	S-00-03-012		Ecrou	Nut		4	4	4	4	4	4			4	4	4				
10	S-61-02-001		Boulon	Bolt		2	2	2	2	2	2			2	2	2				
11	S-00-13-004		Interrupteur	Ignition switch		1	1	1	1	1	1			1	1	1				
12	S-73-02-018		Couvre moteur	Engine cover		1	1	1	1	1	1			1	1	1				
13	S-00-12-004		Rondelle	Washer		4	4	4	4	4	4			4	4	4				
14	S-00-01-042		Boulon ailette	Thumbscrew		4	4	4	4	4	4			4	4	4				
15	S-73-02-019		Trappe carburateur	Carburator cover		1	1	1	1	1	1			1	1	1				
16	S-10-02-003		Isolateur 33"	Insulation		2	2	2	2	2	2			2	2	2				
17	S-10-02-004		Tube en cuivre	Copper tubing		2	2	2	2	2	2			2	2	2				
18	S-71-02-002		Siège ass	Seat ass		1	1	1	1	1	1									
-	S-71-02-003		" "	" "										1	1	1				
19	S-71-02-004		Dossier ass	Back rest.		1	1	1	1	1	1									
-	S-71-02-005		" "	" "										1	1	1				
20	S-00-13-055		Receptacle	Socket		2	2	2	2	2	2			2	2	2				
21	S-00-13-056		Ampoule	Bulb		2	2	2	2	2	2			2	2	2				
22	S-00-13-057		Vitre lumière arr.	Tail light lens		2	2	2	2	2	2			2	2	2				
23	S-11-02-001		Contour lumière arr.	Light ring		2	2	2	2	2	2			2	2	2				
24	S-00-07-001		Boulon	Bolt		10	10	10	16	10	10			10	10	10				
25	S-00-13-058		Réflecteur Ga	Reflector L.H		1	1	1	1	1	1			1	1	1				
-	S-00-13-059		" Dr	" R.H		1	1	1	1	1	1			1	1	1				
26	S-00-03-016		Ecrou	Nut		10	10	10	10	10	10			10	10	10				
27	S-01-02-018		Chassis	Body		1					1									
-	S-01-02-019		"	"			1	1	1	1										
-	S-01-02-020		"	"										1	1	1				
28	S-01-02-021		Partie inférieure plastic	Bottom plate		1	1	1	1	1	1			1	1	1				
29	S-06-02-001		Tige	Rod		1	1	1	1	1	1			1	1	1				
30	S-00-03-019		Ecrou	Nut		2	2	2	2	2	2			2	2	2				
31	S-00-12-002		Rondelle	Washer		2	2	2	2	2	2			2	2	2				
32	S-00-01-043		Boulon	Bolt		2	2	2	2	2	2			2	2	2				
33	S-61-02-002		Support (partie inférieure dr)	Bottom plate support r.h.		1	1	1	1	1	1			1	1	1				
-	S-61-02-003		" " Ga	" " " left		1	1	1	1	1	1			1	1	1				
34	S-00-01-014		Boulon	Bolt		6	6	6	6	6	6			6	6	6				
35	S-00-01-030		Boulon	Bolt		8	8	8	8	8	8			8	8	8				
36	S-00-03-002		Ecrou	Nut		8	8	8	8	8	8			8	8	8				
37	S-01-02-022		Attache ressort	Spring holder		1	1	1	1	1	1			1	1	1				
38	S-61-01-001		Tapis marche pied Dr.	Foot pad Rh.		1	1	1	1	1	1			1	1	1				
-	S-61-01-002		" " " Ga.	Foot pad lf		1	1	1	1	1	1			1	1	1				
39	S-74-02-001		Pare-choc avant	Pare-choc arr		1	1	1	1	1	1			1	1	1				
40	S-00-13-060		Reflecteur	Reflector		2	2	2	2	2	2			2	2	2				
41	S-00-02-010		Rivet	Pop rivet		4	4	4	4	4	4			4	4	4				
42	S-05-01-013		Suspension complète	Suspension ass										1	1	1				
43	S-05-01-005		Support intérieur	Int. support		3	3	3	3	3	3									
-	S-05-01-018		" "	" "										3	3	3				
44	S-05-01-011		Suspension complète	Suspension ass		3	3	3	3	3	3									
-	S-05-01-012		" "	" "										3	3	3				
45	S-00-01-005		Boulon	Bolt		6	6	6	6	6	6			8	8	8				
46	S-00-01-006		Boulon	Bolt		12	12	12	12	12	12			14	14	14				
47	S-00-12-001		Rondelle sécurité	Lock washer		6	6	6	6	6	6			8	8	8				
48	S-05-01-009		Arbre	Aluminium shaft		3	3	3	3	3	3									
-	S-05-01-010		"	" "										4	4	4				
49	S-00-19-001		Roue caout.	Rubber wheel		12	12	12	12	12	12			14	14	14				
50	S-05-01-008		Support ext.	Ext. support		3	3	3	3	3	3									
-	S-05-01-015		" ext.	" "										4	4	4				
51	S-65-01-011		Ressort dr.	Spring rh		3	3	3	3	3	3			4	4	4				
52	S-65-01-002		Ressort Ga	" Lh		3	3	3	3	3	3			4	4	4				
53	S-03-01-003		Chenille	Track		1	1	1	1	1	1									
-	S-03-01-004		"	"										1	1	1				
54	S-00-03-007		Ecrou	Nut		2	2	2	2	2	2			2	2	2				
55	S-00-01-018		Boulon	Bolt		2	2	2	2	2	2			2	2	2				
56	S-14-01-020		Pare-choc arrière	Rear Bumper		1	1	1	1	1	1									
-	S-14-01-021		" " "	" "										1	1	1				
57	S-01-01-099		Garde neige	Snow flap		1	1	1	1	1	1									
-	S-01-01-100		" "	" "										1	1	1				
58	S-00-01-016		Boulon	Bolt		4	4	4	4	4	4			4	4	4				
59	S-00-12-002		Rondelle	Washer		8	8	8	8	8	8			8	8	8				

SALSBURY

ILLUSTRATED PARTS LIST

MODEL 780 DRIVE PULLEY

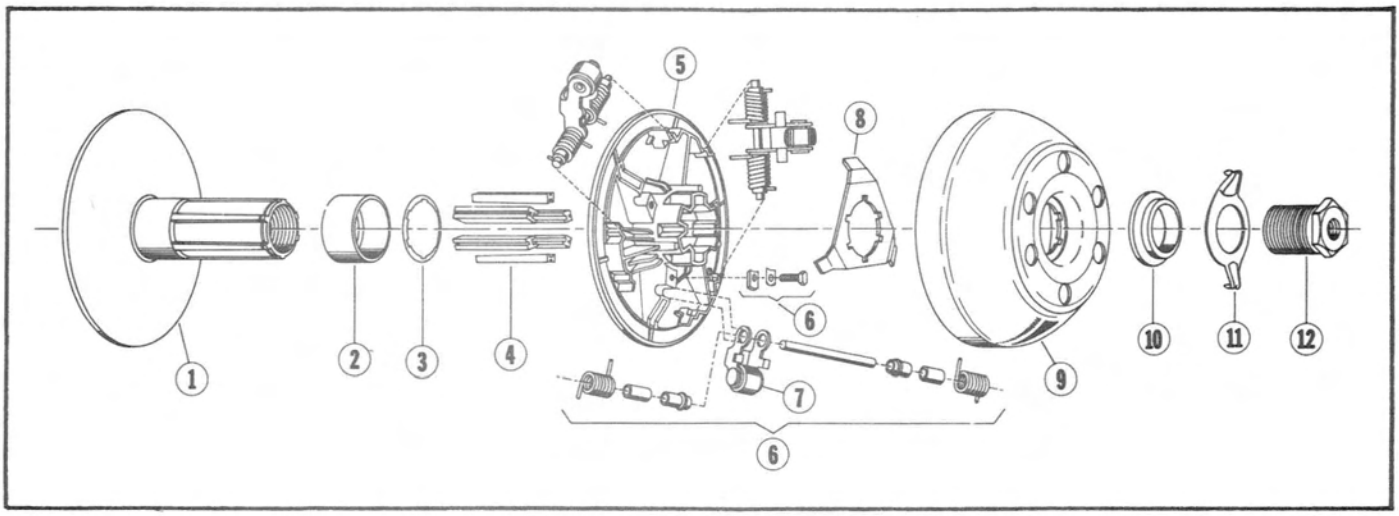

DRIVE PULLEY

143200	25mm tapered bore with .11 inset
143201	24mm tapered bore with .16 offset
143202	25mm tapered bore with .11 inset
143203	30mm tapered bore with .20 offset
143204	25mm tapered bore with .16 offset
143205	30mm tapered bore with .19 inset
143206	25mm tapered bore with .11 inset
143207	30mm tapered bore with .20 offset
143208	25mm tapered bore with .16 offset
143209	30mm tapered bore with .19 inset

DRIVE PULLEY

143210	30mm tapered bore, flush
143211	30mm tapered bore, flush
143212	30mm tapered bore, flush
143213	24mm tapered bore with .16 offset
143214	30mm tapered bore, flush
143215	30mm tapered bore, flush
143216	24mm tapered bore with .16 offset
143217	25mm tapered bore with .11 inset
143218	30mm tapered bore with .20 offset
143219	30mm tapered bore with .19 inset
143220	25mm tapered bore with .16 offset
143221	30mm tapered bore, flush

SALSBURY CORPORATION

1010 EAST 62nd STREET, LOS ANGELES, CALIFORNIA 90001 • PHONE (213) 232-6181

MODEL 780 DRIVE PULLEY

143223	25mm tapered bore with .21 inset
143224	30mm tapered bore, flush
143225	30mm tapered bore with .20 offset
143226	30mm tapered bore with .19 inset
143227	30mm tapered bore with .19 inset
143228	30mm tapered bore with .20 offset
143229	25mm tapered bore with .11 inset
143230	30mm tapered bore with .20 offset
143231	30mm tapered bore with .38 inset
143232	30mm tapered bore with .20 offset

ITEM NO.	PART NUMBER	DESCRIPTION	ASSEMBLY NUMBER	QTY. REQ'D
1.	703252	Fixed Face & Hub - 30mm tapered bore .19 inset	143205, 209, 219, 226, 227	1
	703253	Fixed Face & Hub - 30mm tapered bore, flush	143210, 211, 212, 214, 215, 221, 224	1
	703254	Fixed Face & Hub - 30mm tapered bore .20 offset	143203, 207, 218, 225, 228, 230, 232	1
	703255	Fixed Face & Hub - 25mm tapered bore .21 inset	143223	1
	703256	Fixed Face & Hub - 25mm tapered bore .11 inset	143200, 202, 206, 217, 229	1
	703257	Fixed Face & Hub - 25mm tapered bore .16 offset	143204, 208, 220	1
	703258	Fixed Face & Hub - 24mm tapered bore .16 offset	143201, 213, 216	1
	703388	Fixed Face & Hub - 30mm tapered bore .38 inset	143231	1
2.	703191	Bearing - idler	All except 143232	1
3.	703192	Washer - idler bearing	All	1
4.	703193	Liner - spline	All	6
5.	601430	Movable Face Assembly (includes Items 6 & 7)	143200, 201, 202, 203, 204, 205, 210	1
	601431	Movable Face Assembly (includes Items 6 & 7)	143225, 227, 229, 231	1
	601432	Movable Face Assembly (includes Items 6 & 7)	143215, 216, 217, 218, 219, 220, 221	1

SALSBURY CORPORATION

1010 EAST 62nd STREET, LOS ANGELES, CALIFORNIA 90001 • PHONE (213) 232-6181

MODEL 780 DRIVE PULLEY

ITEM NO.	PART NUMBER	DESCRIPTION	ASSEMBLY NUMBER	QTY. REQ'D.
	601433	Movable Face Assembly (includes Items 6 & 7)	143214, 226, 228	1
	601434	Movable Face Assembly (includes Items 6 & 7)	143206, 207, 208, 209, 211 212, 213, 223. 224	1
	601439	Movable Face Assembly (includes Items 6 & 7)	143230	1
	601498	Movable Face Assembly (includes Items 6 & 7)	143232	1
6.	690161	Service Kit - springs, pins, bushings, etc.	143200, 201, 202, 203, 204, 205, 210	1 set
	690162	Service Kit - springs, pins, bushings, etc.	143206, 207, 208, 209, 211, 212, 213, 223, 224, 225, 227, 229, 231	1 set
	690163	Service Kit - springs, pins, bushings, etc.	143214, 215, 216, 217, 218, 219, 220, 221, 226, 228	1 set
	690170	Service Kit - springs, pins, bushings, etc.	143230, 232	1 set
7.	690164	Service Kit - roller arm assembly and bushings	143200, 201, 202, 203, 204, 205, 210, 215, 216, 217. 218, 219, 220, 221, 225, 227, 229, 230, 231	1 set
	690165	Service Kit - roller arm assembly and bushings	143206, 207, 208, 209, 211, 212, 213, 214, 223, 224, 226, 228	1 set
	690175	Service Kit - roller arm assembly and bushings	143232	1 set
8.	703194	Retractor	All	1

SALSBURY CORPORATION

1010 EAST 62nd STREET, LOS ANGELES, CALIFORNIA 90001 • PHONE (213) 232-6181

MODEL 780 DRIVE PULLEY

ITEM NO.	PART NUMBER	DESCRIPTION	ASSEMBLY NUMBER	QTY. REQ'D
9.	601330	Ramp Plate Assembly (includes Items 10 & 11)	143200, 201, 202, 203, 204, 205, 206, 207, 208, 209, 210, 211, 212, 213, 214, 215, 216, 217, 218, 219, 220, 221, 223, 224, 225, 226, 227, 228, 229, 231	1
	601446	Ramp Plate Assembly (includes Items 10 & 11)	143230	1
	601486	Ramp Plate Assembly (includes Items 10 & 11)	143232	1
10.	703200	Washer - ramp plate clamp	All	1
11.	703245	Lockplate - ramp plate	All	1
12.	703208	Nut - ramp plate clamp	All	1

SALSBURY CORPORATION

1010 EAST 62nd STREET, LOS ANGELES, CALIFORNIA 90001 • PHONE (213) 232-6181

SALSBURY

ILLUSTRATED PARTS LIST

MODEL 910 DRIVE PULLEY

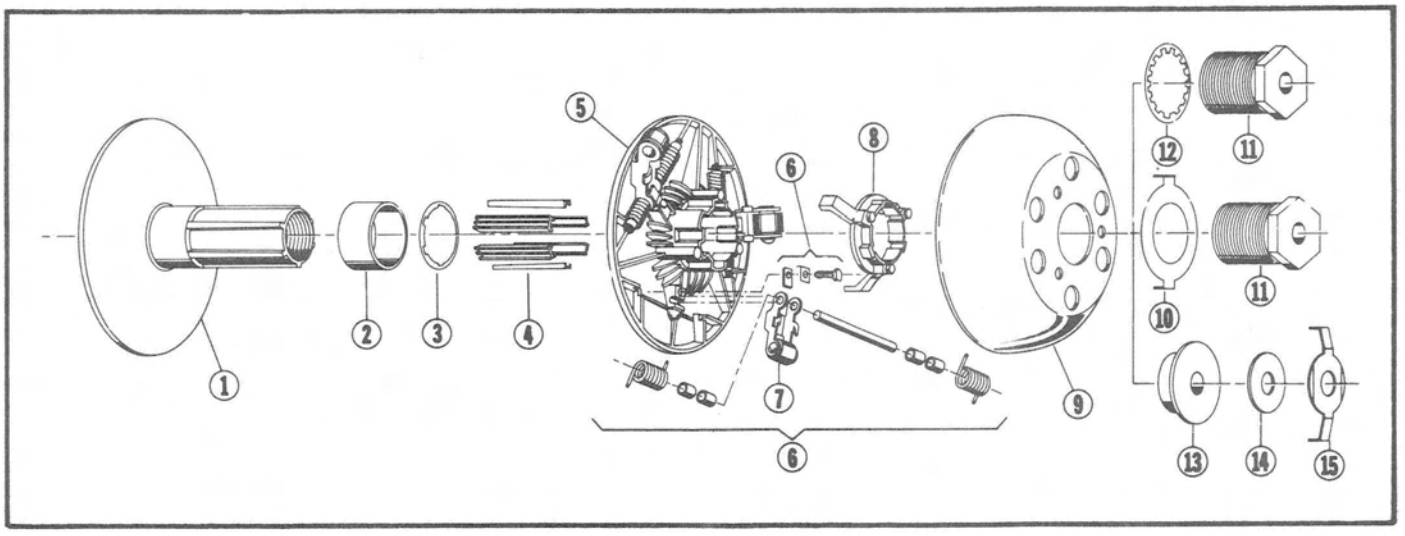

DRIVE PULLEY

140900	30mm tapered bore, flush
140901	30mm tapered bore, flush
140902	25mm tapered bore with .11 inset
140903	30mm tapered bore with .756 inset
140904	3/4" bore for Rotax engine
140905	25mm tapered bore with .11 inset
140906	30mm tapered bore, flush
140907	30mm tapered bore, flush
140908	30mm tapered bore with .756 inset
140909	3/4" bore for Rotax engine
140910	30mm tapered bore with .16 inset

DRIVE PULLEY

140911	30mm tapered bore, flush
140912	30mm tapered bore, flush
140913	25mm tapered bore with .11 inset
140914	30mm tapered bore, flush
140915	30mm tapered bore, flush
140916	30mm tapered bore, flush
140917	30mm tapered bore with .16 inset
140918	30mm tapered bore, flush
140919	30mm tapered bore, flush
140920	1-1/2" x 1:10 tapered bore
140921	30mm tapered bore, flush
140922	25mm tapered bore, flush
140923	30mm tapered bore, flush
140924	30mm tapered bore, flush

SALSBURY CORPORATION

1010 EAST 62nd STREET, LOS ANGELES, CALIFORNIA 90001 • PHONE (213) 232-6181

MODEL 910 DRIVE PULLEY

ITEM NO.	PART NUMBER	DESCRIPTION	ASSEMBLY NUMBER	QTY. REQ'D
1.	601201	Fixed Face Assembly 30mm tapered bore, flush	140900, 901, 906, 907, 911, 912, 914, 915, 916, 918, 919, 921, 923, 924	1
	601252	Fixed Face Assembly 25mm tapered bore with .11 inset	140902, 905, 913	1
	601265	Fixed Face Assembly 30mm tapered bore with .756 inset	140903, 908	1
	601279	Fixed Face Assembly 3/4" bore for Rotax engine	140904, 909	1
	601286	Fixed Face Assembly 30mm tapered bore with .16 inset	140910, 917	1
	601435	Fixed Face Assembly 25mm tapered bore, flush	140922	1
	703022	Fixed Face Assembly 1-1/2" x 1:10 tapered bore	140920	1
2.	703071	Bearing, Idler	All	1
3.	703031	Washer, Idler Bearing	All	1
4.	703037	Liner, spline	All	6
5.	601424	Movable Face Assembly (includes Items 6 & 7)	140911, 914, 917, 919, 920	1
	601425	Movable Face Assembly (includes Items 6 & 7)	140900, 901, 902, 903, 904, 910, 912, 913, 916, 922	1
	601426	Movable Face Assembly (includes Items 6 & 7)	140905, 906, 907,908,909,915	1
	601441	Movable Face Assembly (includes Items 6 & 7)	140921	1
	601442	Movable Face Assembly (includes Items 6 & 7)	140918	1
	601467	Movable Face Assembly (includes Items 6 & 7)	140923	1
	601487	Movable Face Assembly (includes Items 6 & 7)	140924	1

MODEL 910 DRIVE PULLEY

ITEM NO.	PART NUMBER	DESCRIPTION	ASSEMBLY NUMBER	QTY. REQ'D
6.	690114	Service Kit-spring, pins, bushing	140900, 901, 902, 903, 904, 905, 906, 907, 908, 909, 910	1 set
	690148	Service Kit-springs, pins, bushings, etc.	140911, 912, 913, 914, 915, 916, 917, 919, 920, 922	1 set
	690169	Service Kit-springs, pins, bushings, etc.	140918, 921, 923	1 set
	690173	Service Kit-springs, pins, bushings, etc.	140924	1 set
7.	690118	Service Kit-roller arm assembly and bushings	140900, 901, 902, 903, 904, 910	1 set
	690127	Service Kit-roller arm assembly and bushings	140905, 906, 907, 908, 909	1 set
	690154	Service Kit-roller arm assembly and bushings	140911, 914, 917, 918, 919, 920	1 set
	690155	Service Kit-roller arm assembly and bushings	140915	1 set
	690156	Service Kit-roller arm assembly and bushings	140912, 913, 916, 922, 924	1 set
	690168	Service Kit-roller arm assembly and bushings	140921	1 set
	690174	Service Kit-roller arm assembly and bushings	140923	1 set
8.	703008	Spider	All	1
9.	601202	Ramp Plate Assembly (includes Item 10)	140900, 901, 902, 903, 904, 905, 906, 907, 908, 909, 910	1
	601379	Ramp Plate Assembly (includes Item 10)	140911, 914, 917, 918, 919, 921, 924	1

SALSBURY CORPORATION

1010 EAST 62nd STREET, LOS ANGELES, CALIFORNIA 90001 • PHONE (213) 232-6181

MODEL 910 DRIVE PULLEY

ITEM NO.	PART NUMBER	DESCRIPTION	ASSEMBLY NUMBER	QTY. REQ'D
	601383	Ramp Plate Assembly (includes Item 10)	140912, 916	1
	601388	Ramp Plate Assembly (includes Item 10)	140913, 915, 920	1
	601470	Ramp Plate Assembly (includes Item 10)	140923	1
	601474	Ramp Plate Assembly (includes Item 10)	140922	1
10.	703229	Lockplate-Ramp Plate	All	1
11.	703099	Nut-Ramp Plate	All	1
12.		Use Part No. 703229 Item 10	140900, 901, 902, 903, 904	1
13.		Use Part Nos. 703229 and 703099, Items 10 and 11	140901, 907	1
14.		Use Part Nos. 703229 and 703099, Items 10 and 11	140901, 907	1
15.		Use Part Nos. 703229 and 703099, Items 10 and 11	140901, 907	1

SALSBURY CORPORATION

1010 EAST 62nd STREET, LOS ANGELES, CALIFORNIA 90001 • PHONE (213) 232-6181

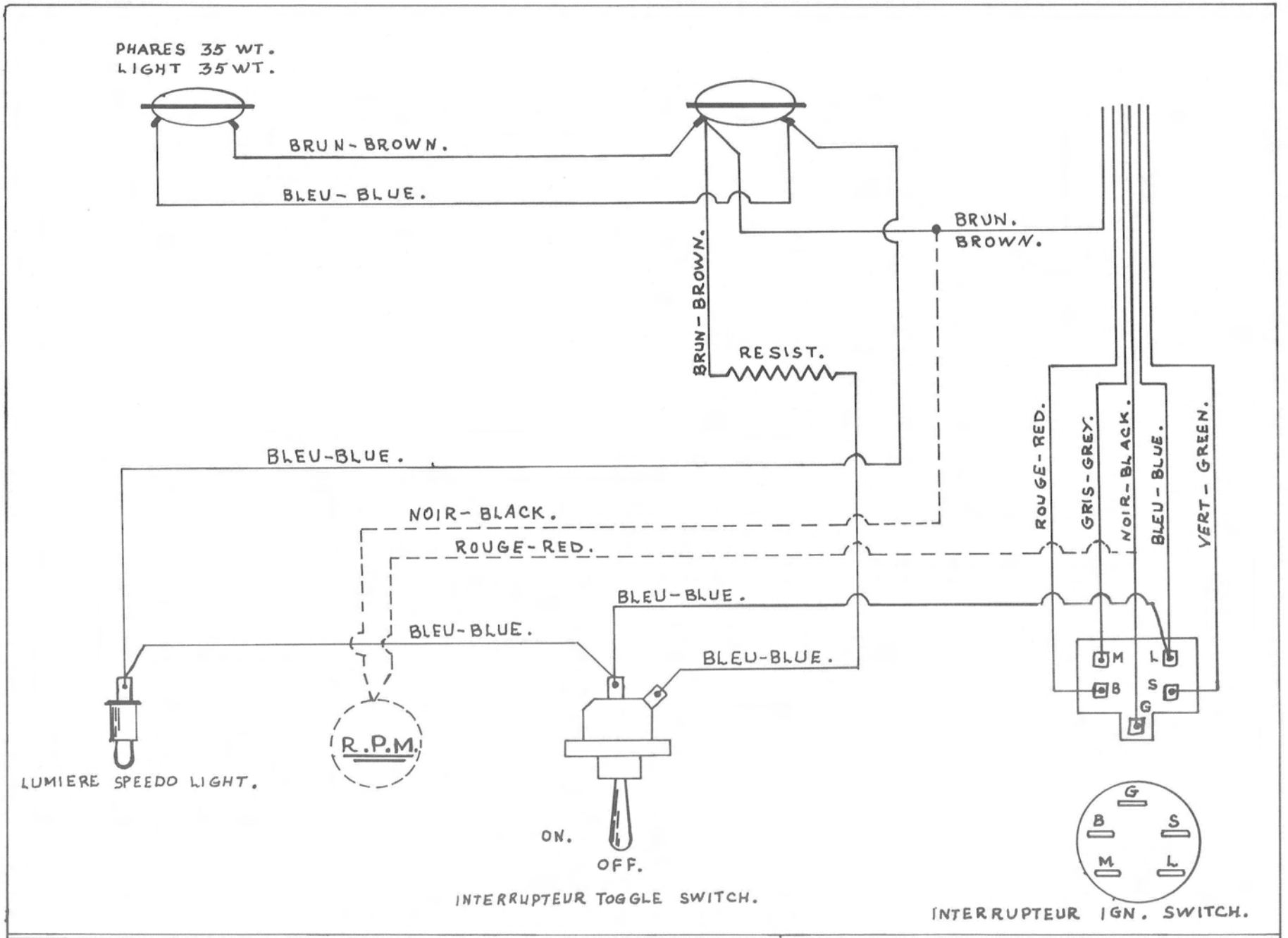

BOA-SKI. INC.	WIRING MARK I MANUEL EXC. 340 C.C.W.	7 Juil. 1971.	1S-99-23-040.